WEAVE Craft
live life outdoors

NEW SOLUTIONS FOR SHADOWS

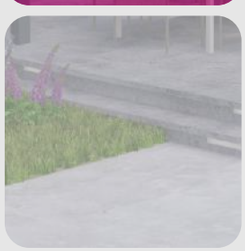
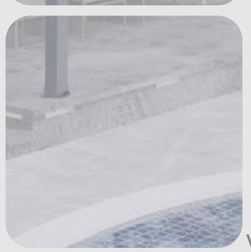

www.pergostyle.com

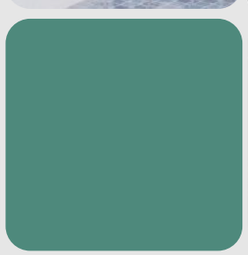

FLAT | 4-31

SPLINE | 32-55

VAULT | 56-65

PRADO | 70-79

EVO | 80-87

PROSCREEN | 88-93

PERGOWIN | 94-105

www.weavecraft.net

WEAVE Craft
live life outdoors

new solutions for shadows

www.weavecraft.net

Pergostyle has a wide range of architectural retractable pergolas and roof systems suitable for any weather condition. They are also available for an extensive range of residential and commercial applications. For homeowners looking for retractable pergolas or custom roof systems to serve different purposes such as to enhance the outdoor appearance of the home, a restaurant, bar, or other commercial projects, there is a Pergostyle model to suit your needs.

FOUR SEASONS OUTDOOR LIVING

www.weavecraft.net

FLAT MODELS

The FLAT retractable pergola system provides a perfect and functional solution for all weather conditions, for rain, hail, or shine in residential or commercial applications. Unlike traditional pergolas, retractable offers you the option to cover or enjoy natural lighting. The systems are served with remote-controlled motorization, ensuring a silent and quick operation while switching between your choices. The optional embedded hi-powered LED lighting system with optional remote-controlled dimming allows the user to change the lighting level as needed.

The cover is a German-made fire-rated and waterproof PVC-blackout fabric available in a number of colors and provides maximum durability and resistance to temperature, moisture, and dirt. When the system is not in use, the fabrics are retracted under the standard hood cover to protect from weather elements. When required, linking multiple systems is possible with a channel joining system that ensures a watertight link. The FLAT system includes an integrated gutter system with internal drainage to carry out water from the rain.

Remote Control | RAL Colour | LED in Frames | Windows in Frames | Screens in Frames | Patio Heater | Rain and Snow Sensor

The FLAT Rafter Profiles have been designed with smart side channels that allow easy installation and side Waterguard Channels. Rafter profiles, including a timing belt of T10/20, is driven by a patented six-wheel slider with an easy clip installation system that allows a silent motion when the fabric is retracted. Flat rafters are served with three different dimensions to provide a maximum range for extension values:

The FLAT - 125 Rafter (60x125 mm.) allows projections up to 5 m. per unit, and widths are customized according to site requirements up to 13 m, totally offering up to 65 sqm per system.

The FLAT - 135 Rafter (80x135 mm.) allows projections up to 7 m. per unit, and widths are customized according to site requirements up to 13 m, totally offering up to 91 sqm per system.

The FLAT - 200 Rafter (100x200 mm.) allows projections up to 10 m. per unit, and widths are customized according to site requirements up to 13 m, totally offering up to 117 sqm per system.

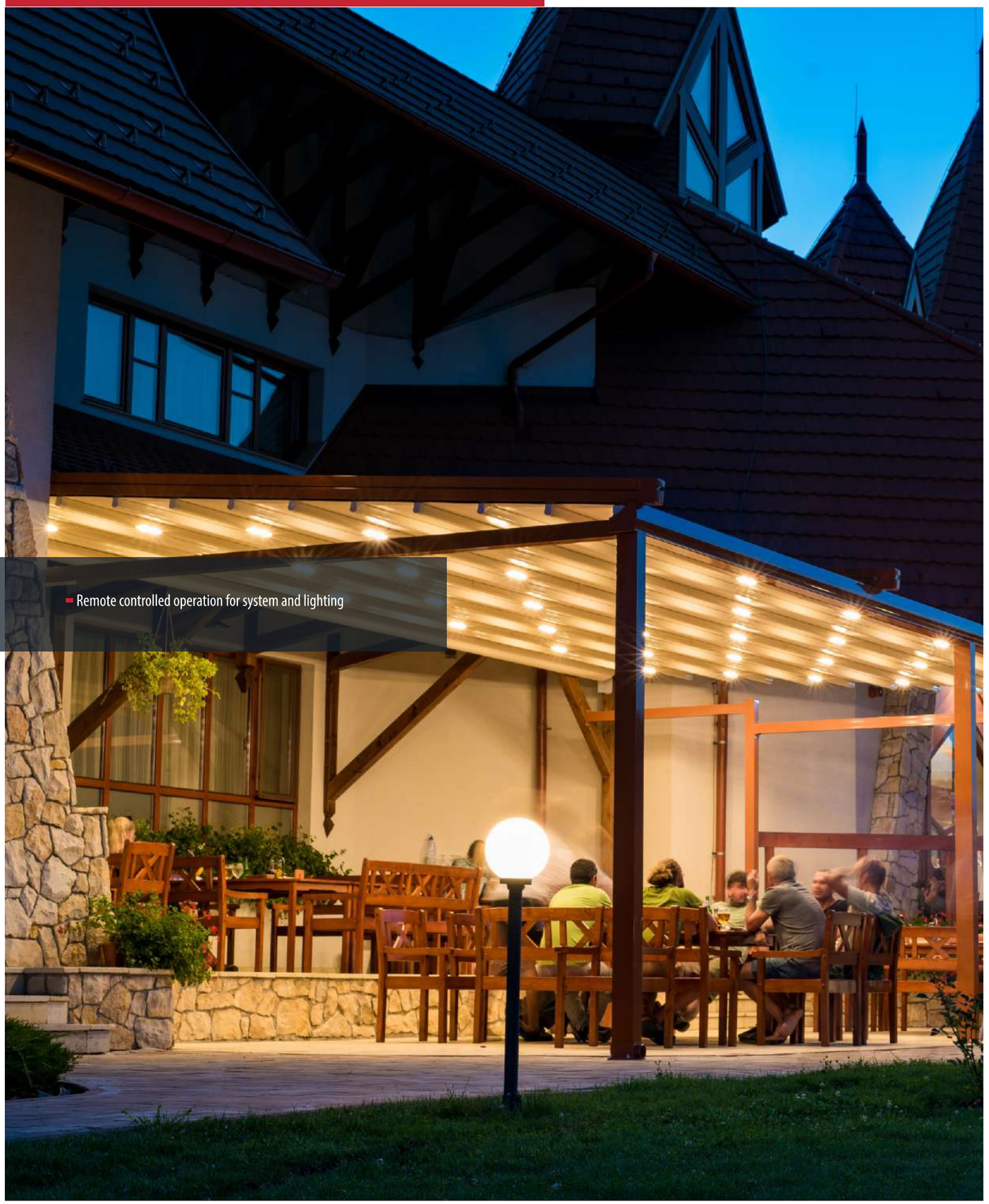

- Remote controlled operation for system and lighting

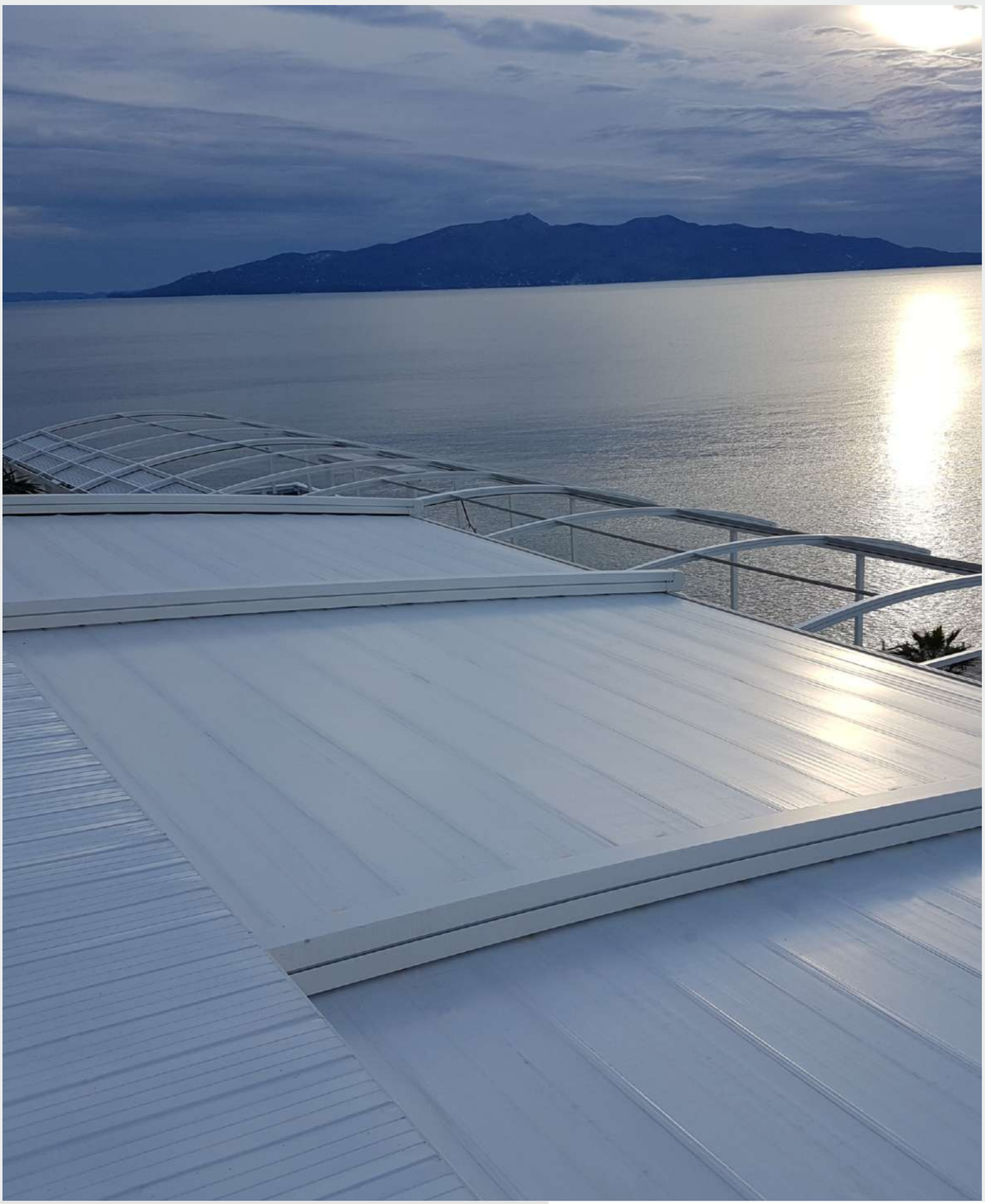

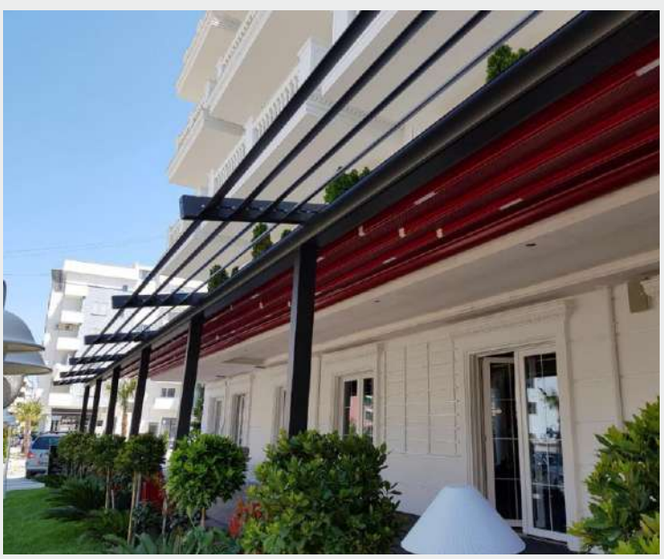

WEAVE Craft
live life outdoors

www.weavecraft.net

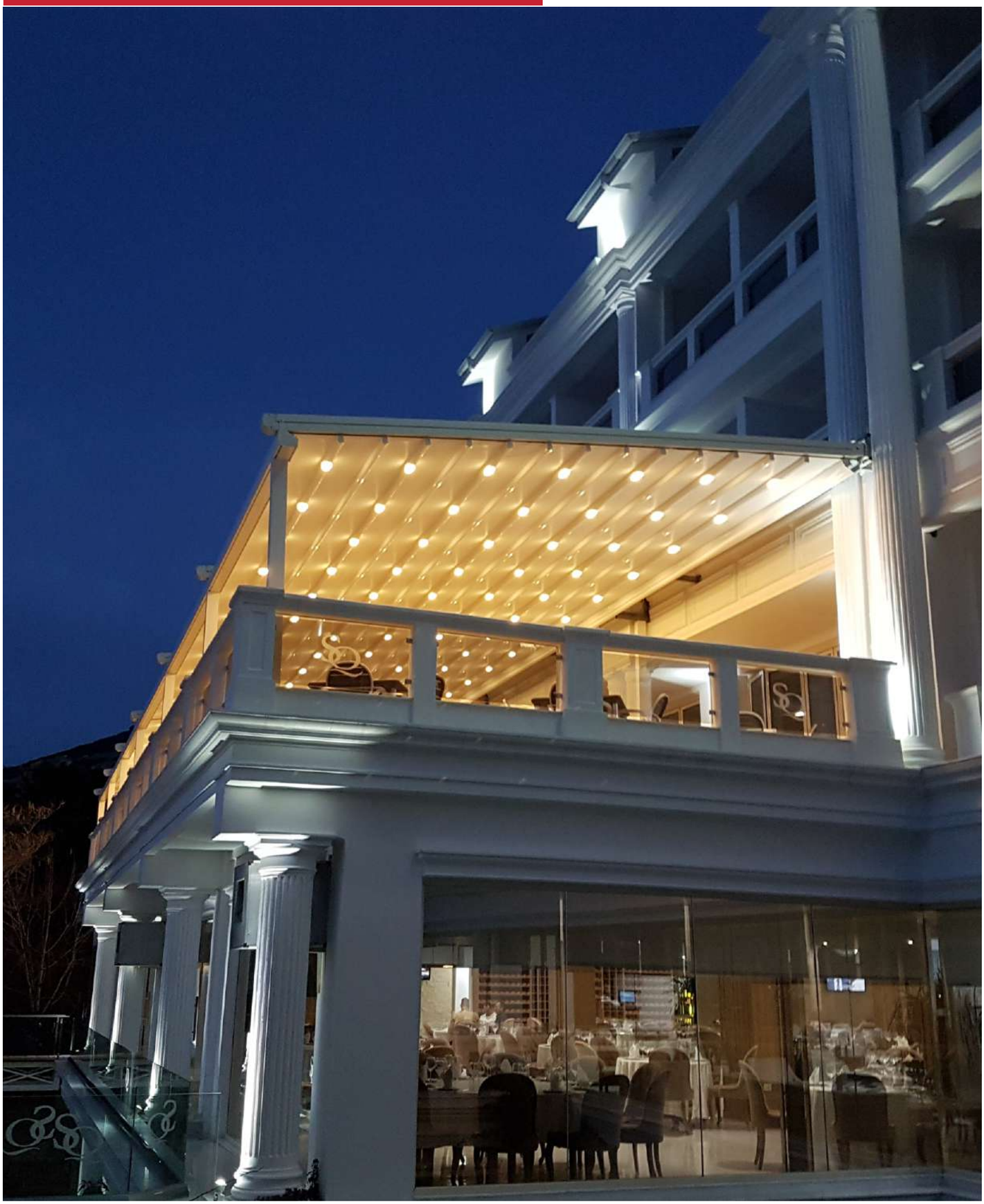

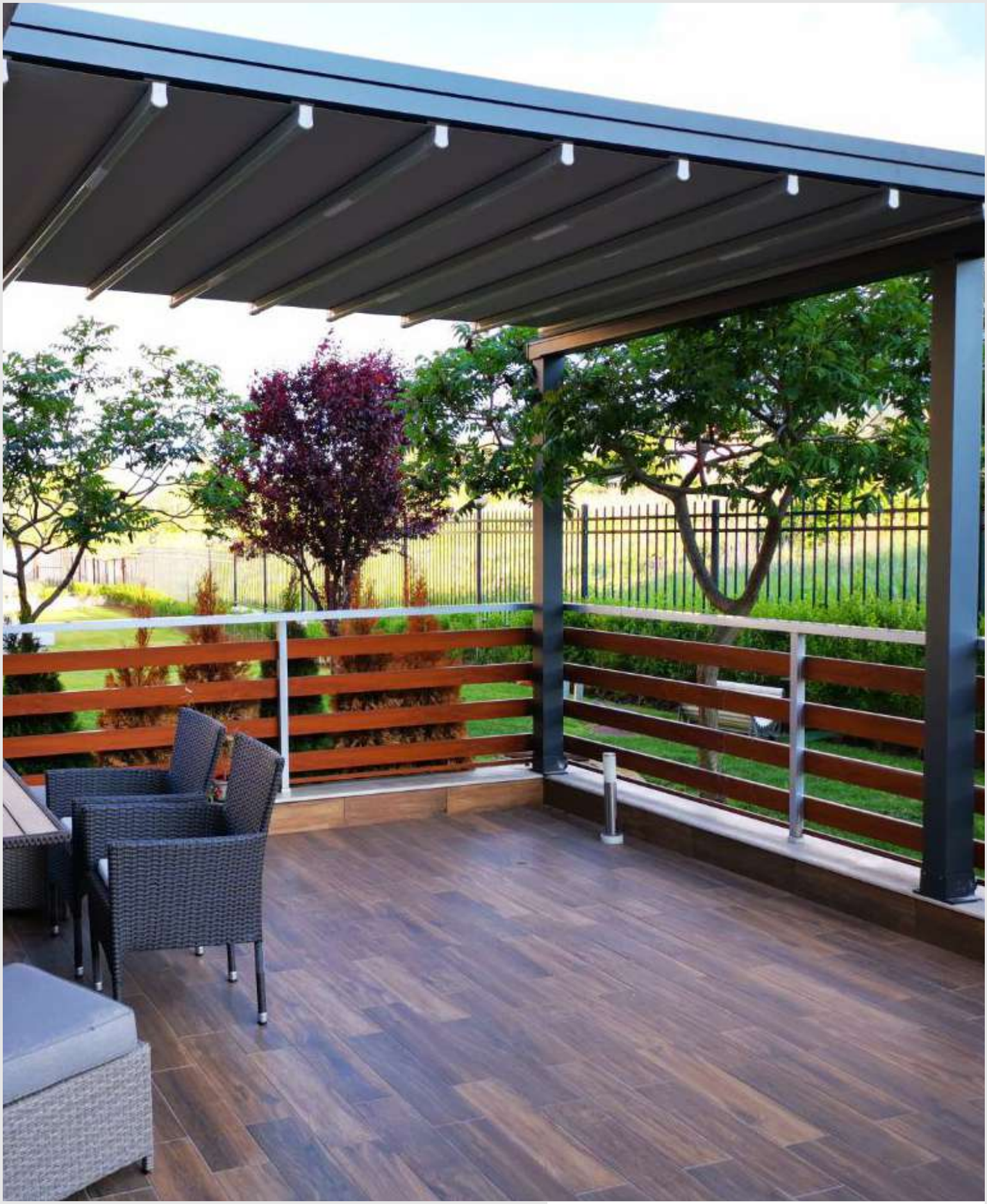

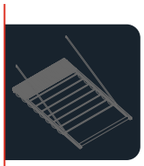

FLAT CITY MODELS

The FLAT CITY retractable pergola system provides a perfect and functional solution for all weather conditions, for rain, hail, or shine in residential or commercial applications. Unlike regular pergolas, retractable offers you the option to cover or enjoy natural lighting. The systems are served with remote-controlled motorization, ensuring a silent and quick operation while switching between your choices. The optional embedded hi-powered LED lighting system with optional remote-controlled dimming allows the user to change the lighting level as needed.

The cover is a German-made fire-rated and waterproof PVC-blackout fabric available in a number of colors and provides maximum durability and resistance to temperature, moisture, and dirt. When the system is not in use, the fabrics are retracted under the standard hood cover to protect from weather elements. When required, linking multiple systems is possible with a channel joining system that ensures a watertight link. The FLAT CITY system includes an integrated gutter system with internal drainage to carry out water from the rain.

Remote Control

RAL Colour

LED in Frames

Windows in Frames

Screens in Frames

Patio Heater

Rain and Snow Sensor

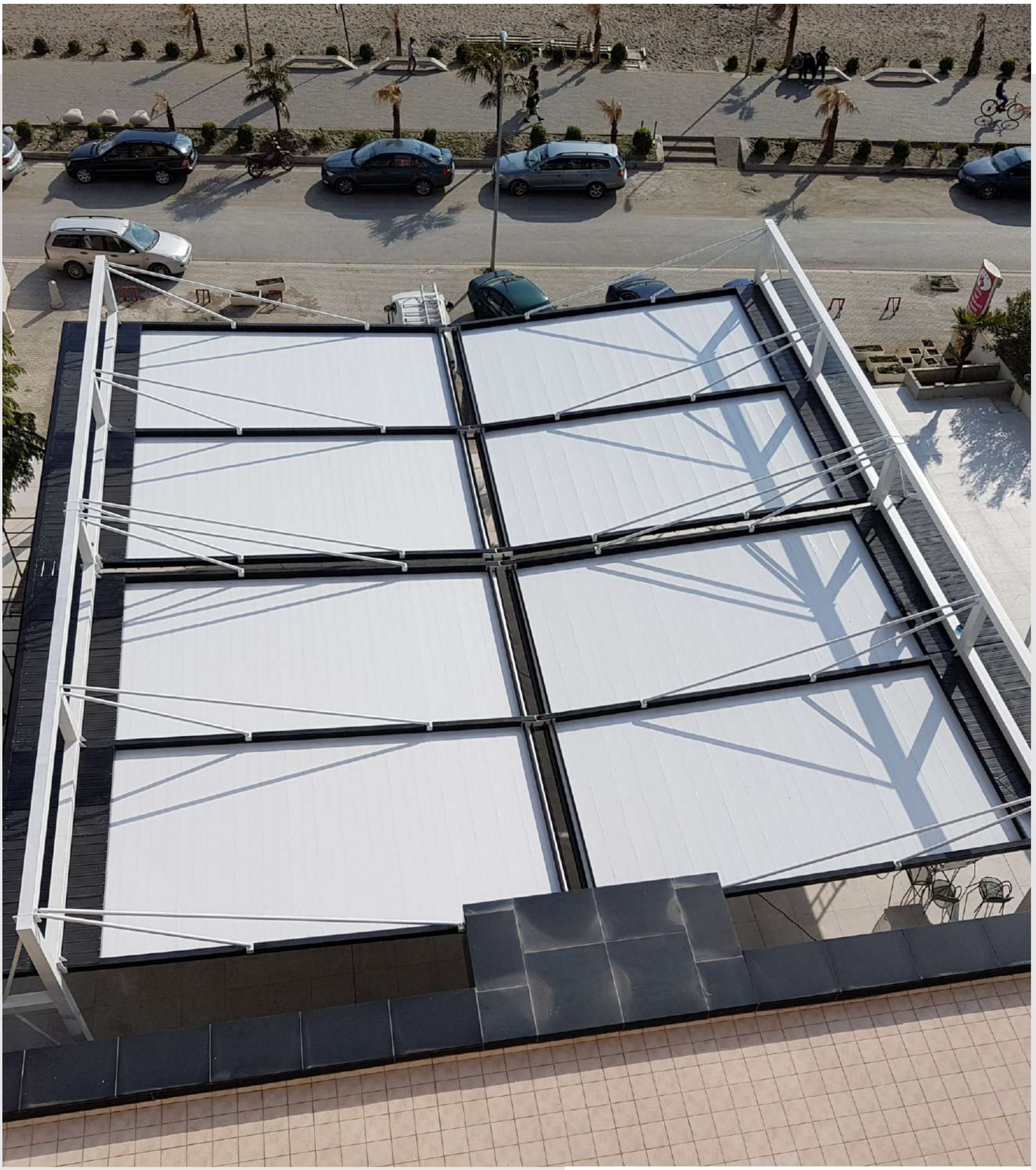

The FLAT CITY Rafter Profiles have been designed with smart side channels that allow easy installation and side Waterguard Channels. Rafter profiles, including a timing belt of T10/20, is driven by a patented six-wheel slider with an easy clip installation system that allows a silent motion when the fabric is retracted. FLAT CITY rafters are served with three different dimensions to provide a maximum range for extension values:

The FLAT CITY - 125 Rafter (60x125 mm.) allows projections up to 5 m. per unit, and widths are customized according to site requirements up to 13 m, totally offering up to 65 sqm per system.

The FLAT CITY - 135 Rafter (80x135 mm.) allows projections up to 5 m. per unit, and widths are customized according to site requirements up to 13 m, totally offering up to 65 sqm per system.

The FLAT CITY - 200 Rafter (100x200 mm.) allows projections up to 5 m. per unit, and widths are customized according to site requirements up to 13 m, totally offering up to 65 sqm per system.

- Remote controlled operation for system and lighting

WEAVE Craft
live life outdoors

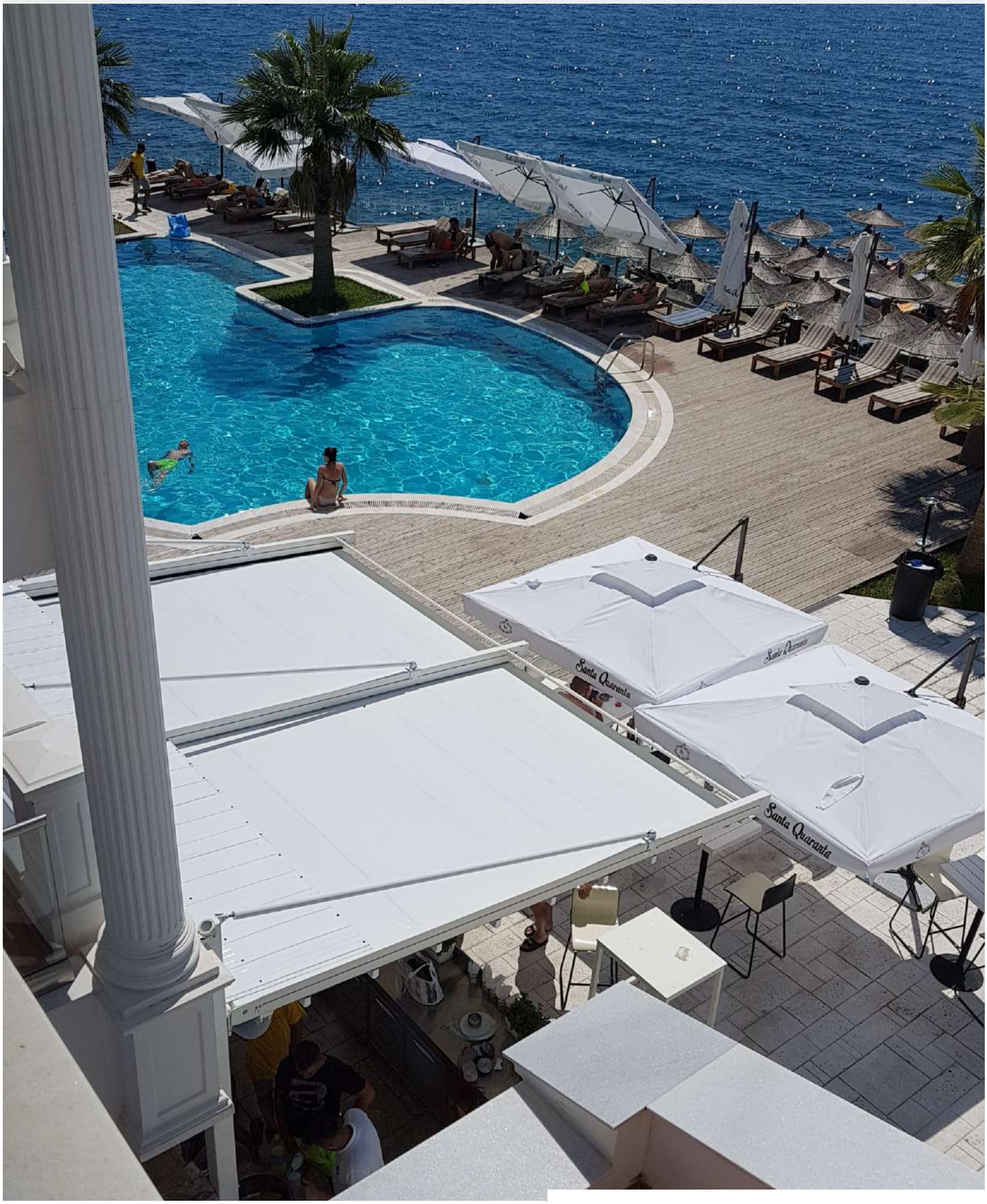

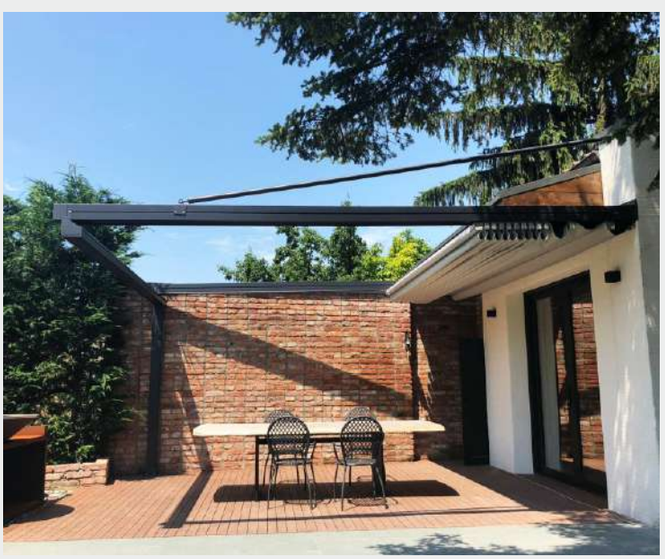

FLAT HARMONY MODELS

The FLAT HARMONY retractable pergola system provides a perfect and functional solution for all weather conditions, for rain, hail, or shine in residential or commercial applications. Unlike regular pergolas, retractable offers you the option to cover or enjoy natural lighting. The systems are served with remote-controlled motorization, ensuring a silent and quick operation while switching between your choices. The optional embedded hi-powered LED lighting system with optional remote-controlled dimming allows the user to change the lighting level as needed.

The cover is a German-made fire-rated and waterproof PVC-blackout fabric available in a number of colors and provides maximum durability and resistance to temperature, moisture, and dirt. When the system is not in use, the fabrics are retracted under the standard hood cover to protect from weather elements. When required, linking multiple systems is possible with a channel joining system that ensures a watertight link. The FLAT HARMONY system includes an integrated gutter system with internal drainage to carry out water from the rain.

The FLAT HARMONY Rafter Profiles have been designed with smart side channels that allow easy installation and side Waterguard Channels. Rafter profiles, including a timing belt of T10/20, is driven by a patented six-wheel slider with an easy clip installation system that allows a silent motion when the fabric is retracted. FLAT HARMONY Rafters are served with three different dimensions to provide a maximum range for extension values:

The FLAT HARMONY - 125 Rafter (60x125 mm.) allows projections up to 10 m. per unit, and widths are customized according to site requirements up to 13 m, totally offering up to 130 sqm per system.

The FLAT HARMONY - 135 Rafter (80x135 mm.) allows projections up to 14 m. per unit, and widths are customized according to site requirements up to 13 m, totally offering up to 182 sqm per system.

The FLAT HARMONY - 200 Rafter (100x200 mm.) allows projections up to 20 m. per unit, and widths are customized according to site requirements up to 13 m, totally offering up to 260 sqm per system.

Sala

- Remote controlled operation for system and lighting

FLAT VARIANCE MODELS

The FLAT VARIANCE retractable pergola system provides a perfect and functional solution for all weather conditions, for rain, hail, or shine in residential or commercial applications. Unlike regular pergolas, retractable offers you the option to cover or enjoy natural lighting. The systems are served with remote-controlled motorization, ensuring a silent and quick operation while switching between your choices. The optional embedded hi-powered LED lighting system with optional remote-controlled dimming allows the user to change the lighting level as needed.

The cover is a German-made fire-rated and waterproof PVC-blackout fabric available in a number of colors and provides maximum durability and resistance to temperature, moisture, and dirt. When the system is not in use, the fabrics are retracted under the standard hood cover to protect from weather elements. When required, linking multiple systems is possible with a channel joining system that ensures a watertight link. The FLAT VARIANCE system includes an integrated gutter system with internal drainage to carry out water from the rain.

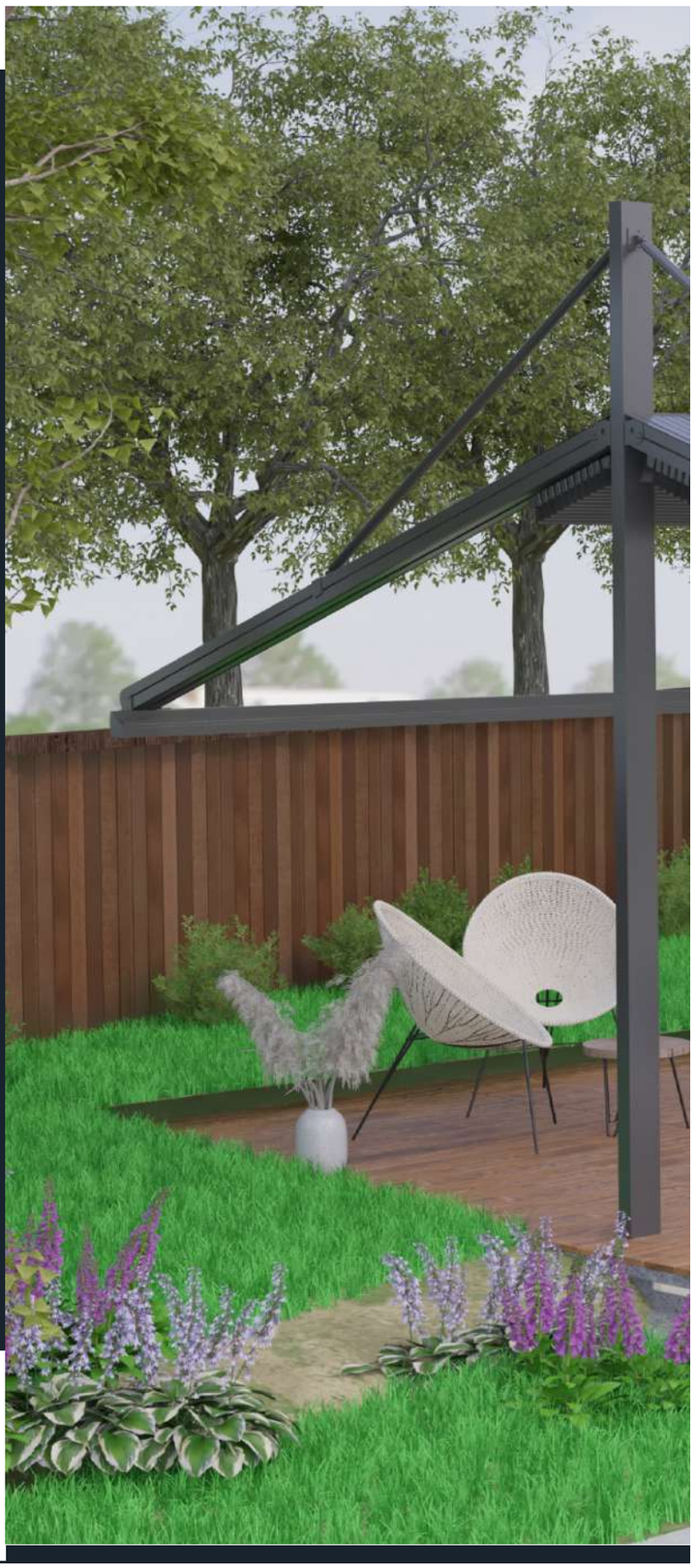

Remote Control | RAL Colour | LED in Frames | Windows in Frames | Screens in Frames | Patio Heater | Rain and Snow Sensor

SPLINE MODELS

The SPLINE retractable pergola system provides a perfect and functional solution for all weather conditions, for rain, hail, or shine in residential or commercial applications. Unlike regular pergolas, retractable offers you the option to cover or enjoy natural lighting. The systems are served with remote-controlled motorization, ensuring a silent and quick operation while switching between your choices. The optional embedded hi-powered LED lighting system with optional remote-controlled dimming allows the user to change the lighting level as needed.

The cover is a German-made fire-rated and waterproof PVC-blackout fabric available in a number of colors and provides maximum durability and resistance to temperature, moisture, and dirt. When the system is not in use, the fabrics are retracted under the standard hood cover to protect from weather elements. When required, linking multiple systems is possible with a channel joining system that ensures a watertight link. The SPLINE system includes an integrated gutter system with internal drainage to carry out water from the rain.

Remote Control

RAL Colour

LED in Frames

Windows in Frames

Screens in Frames

Patio Heater

Rain and Snow Sensor

Carlsberg

The SPLINE Curved Rafter Profiles have been designed with smart side channels that allow an easy installation and side Waterguard Channels. Rafter profiles, including a timing belt of T10/33, is driven by a patented six-wheel slider with an easy clip installation system that allows a silent motion when the fabric is retracted. SPLINE Curved rafters are served with two different dimensions to provide a maximum range for extension values:

The SPLINE - 135 Rafter (80x135mm.) allows projections up to 7 m. per unit, and widths are customized according to site requirements up to 13 m, totally offering up to 91sqm per system.

The SPLINE - 200 Rafter (100x200mm.) allows projections up to 11 m. per unit, and widths are customized according to site requirements up to 13 m, totally offering up to 143 sqm per system.

- Remote controlled operation for system and lighting

- Projections up to 11 mt without support

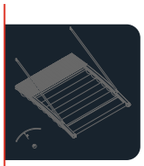

SPLINE CITY MODELS

The SPLINE CITY retractable pergola systems provide a perfect and functional solution for all weather conditions, for rain, hail, or shine in residential or commercial applications. Unlike regular pergolas, retractable offers you the option to cover or enjoy natural lighting. The systems are served with remote-controlled motorization, ensuring a silent and quick operation while switching between your choices. The optional embedded hi-powered LED lighting system with optional remote-controlled dimming allows the user to change the lighting level as needed.

The cover is a German-made fire-rated and waterproof PVC-blackout fabric available in a number of colors and provides maximum durability and resistance to temperature, moisture, and dirt. When the system is not in use, the fabrics are retracted under the standard hood cover to protect from weather elements. When required, linking multiple systems is possible with a channel joining system that ensures a watertight link. The SPLINE CITY system includes an integrated gutter system with internal drainage to carry out water from the rain.

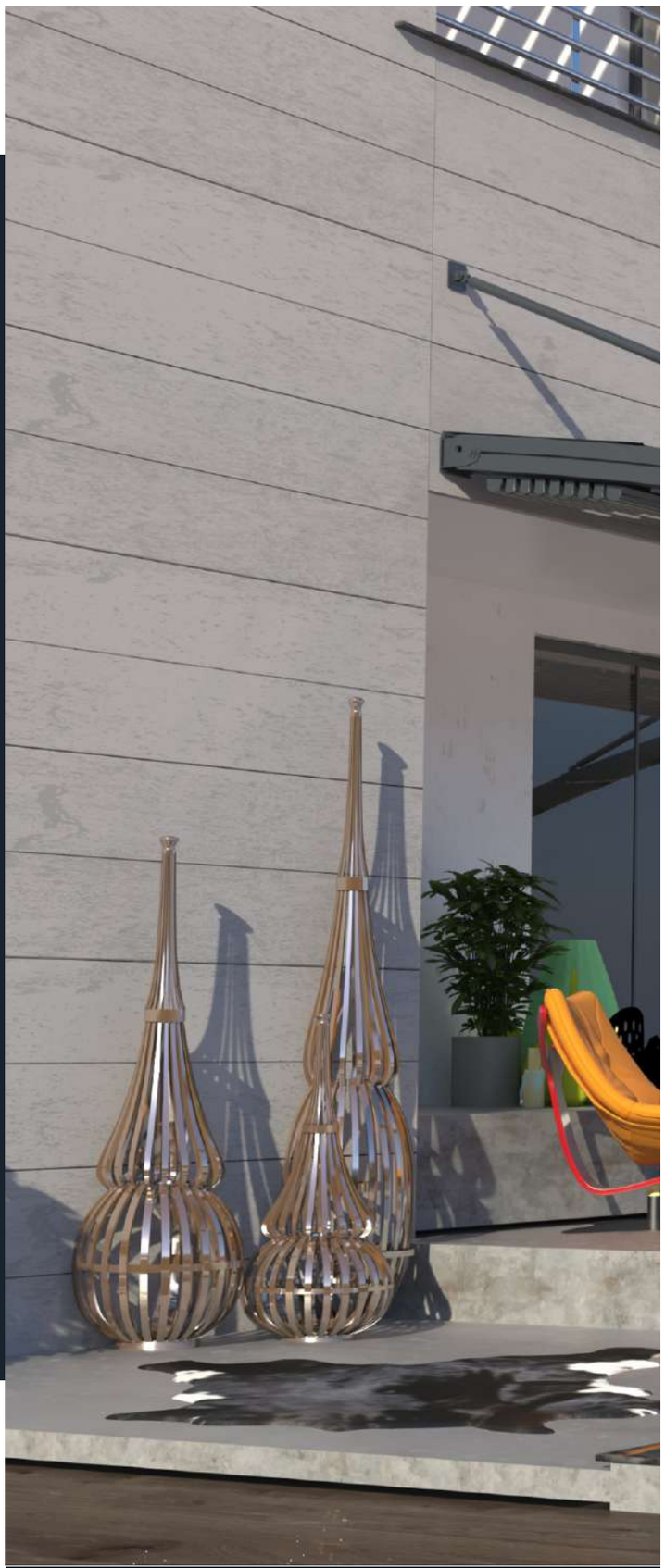

Remote Control

RAL Colour

LED in Frames

Windows in Frames

Screens in Frames

Patio Heater

Rain and Snow Sensor

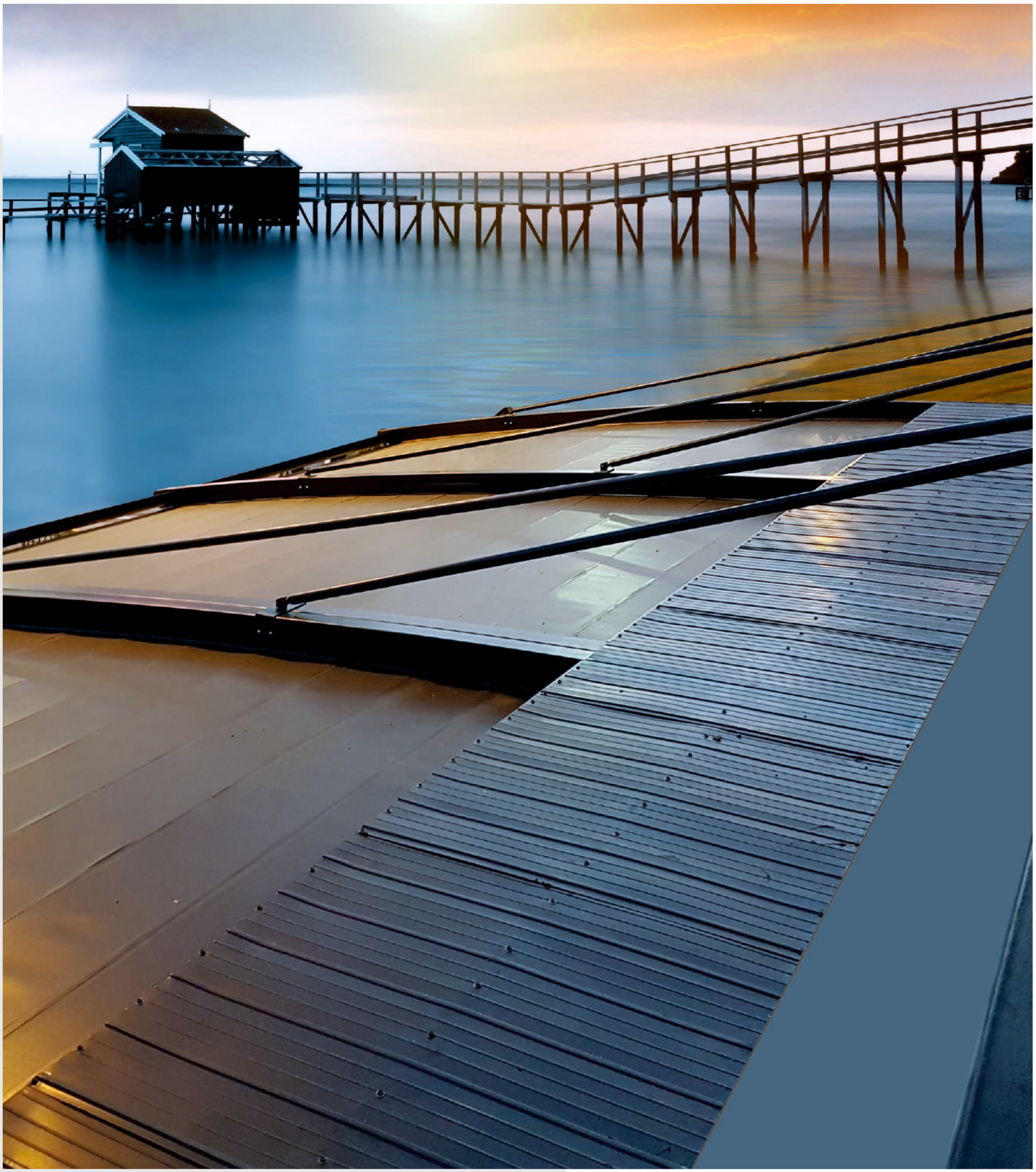

The SPLINE CITY Curved Rafter Profiles have been designed with smart side channels that allow an easy installation and side Waterguard Channels. Rafter profiles, including a timing belt of T10/33, are driven by patented six-wheel sliders with easy clip installation for fabric that allows a silent motion when the fabric is retracted. SPLINE CITY rafters are served with two different dimensions.

The SPLINE CITY - 135 Rafter (80x135mm.) allows projections up to 5 m. per unit, and widths are customized according to site requirements up to 13 m, totally offering up to 65 sqm per system.

The SPLINECITY - 200 Rafter (100x200mm.) allows projections up to 5 m. per unit, and widths are customized according to site requirements up to 13 m .totally offering up to 65 sqm per system.

SPLINE HARMONY MODELS

The SPLINE HARMONY retractable pergola systems provide a perfect and functional solution for all weather conditions, rain, hail, or shine in residential or commercial applications. Unlike regular pergolas, retractable offers you the option to cover or enjoy natural lighting. The systems are served with remote-controlled motorization, ensuring a silent and quick operation while switching between your choices. The optional embedded hi-powered LED lighting system with optional remote-controlled dimming allows the user to change the lighting level as needed.

The cover is a German-made fire-rated and waterproof PVC-blackout fabric available in a number of colors and provides maximum durability and resistance to temperature, moisture, and dirt. When the system is not in use, the fabrics are retracted under the standard hood cover to protect from weather elements. When required, linking multiple systems is possible with a channel joining system that ensures a watertight link. The SPLINE HARMONY system includes an integrated gutter system with internal drainage to carry out water from the rain.

Remote Control

RAL Colour

LED in Frames

Windows in Frames

Screens in Frames

Patio Heater

Rain and Snow Sensor

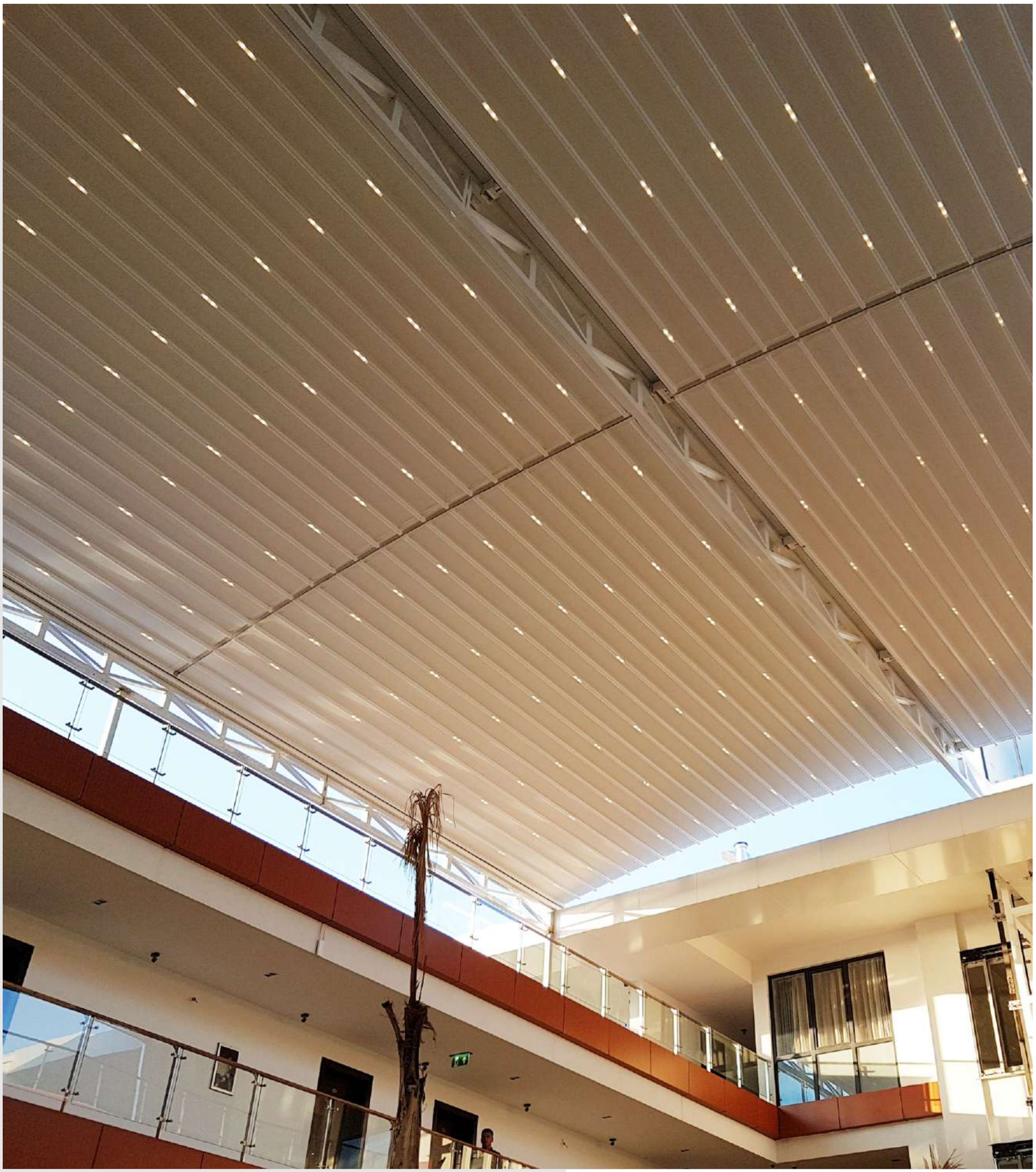

The SPLINE HARMONY Curved Rafter Profiles have been designed with smart side channels that allow an easy installation and side Waterguard Channels. Rafter profiles, including a timing belt of T10/33, are driven by patented six-wheel sliders with easy clip installation for fabric that allows a silent motion when the fabric is retracted. SPLINE HARMONY rafters are served with two different dimensions:

The SPLINE HARMONY - 135 Rafter (80x135mm.) allows projections up to 14 m. per unit, and widths are customized according to site requirements up to 13 m. totally offering up to 182 sqm per system.

The SPLINE HARMONY - 200 Rafter (100x200mm.) allows projections up to 22 m. per unit and widths are customized according to site requirements up to 13 m. totally offering up to 286 sqm per system.

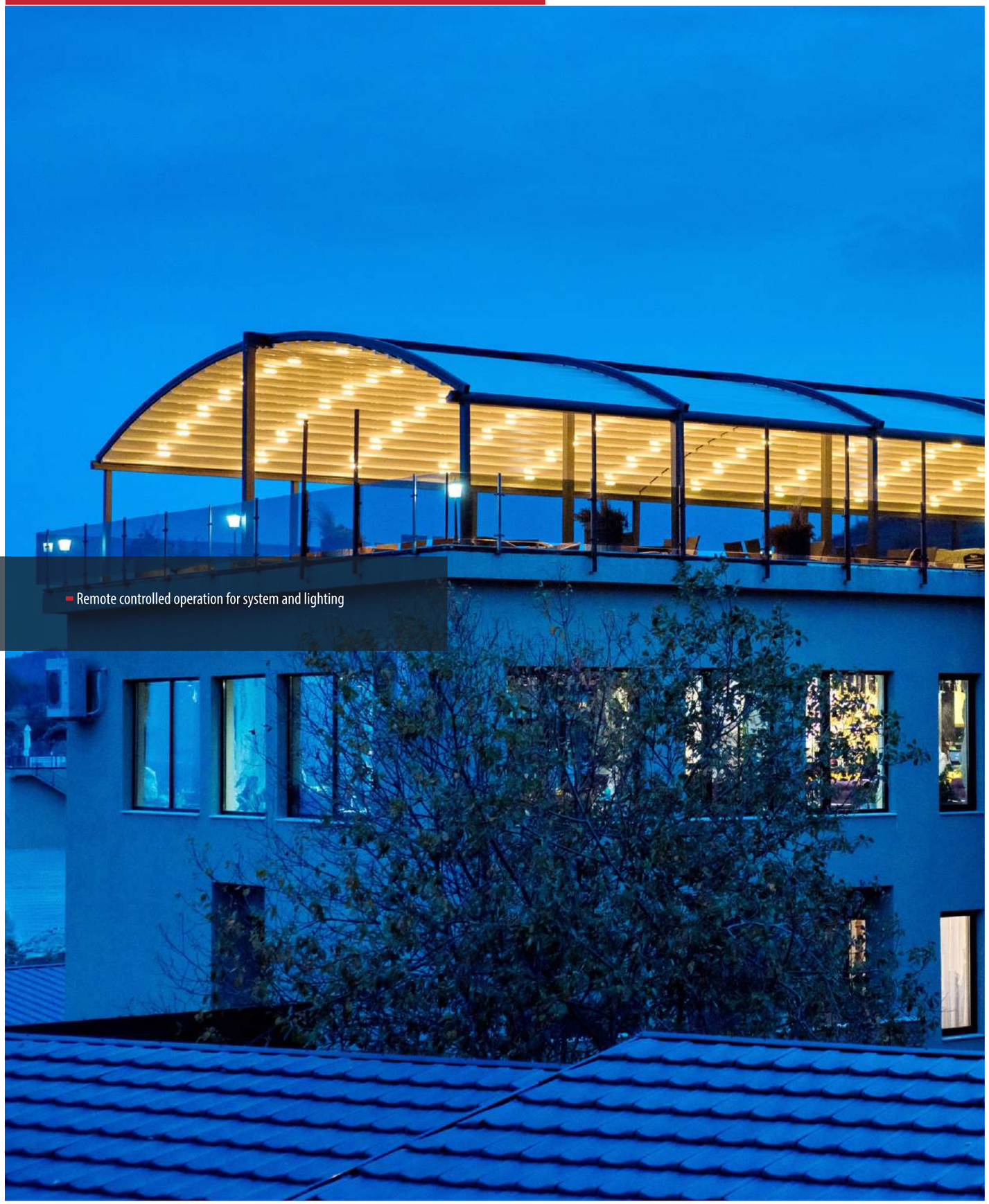

- Remote controlled operation for system and lighting

SPLINE VARIANCE MODELS

The SPLINE VARIANCE retractable pergola systems provide a perfect and functional solution for all weather conditions, rain, hail, or shine in residential or commercial applications. Unlike regular pergolas, retractable offers you the option to cover or enjoy natural lighting. The systems are served with remote-controlled motorization, ensuring a silent and quick operation while switching between your choices. The optional embedded hi-powered LED lighting system with optional remote-controlled dimming allows the user to change the lighting level as needed.

The cover is a German-made fire-rated and waterproof PVC-blackout fabric available in a number of colors and provides maximum durability and resistance to temperature, moisture, and dirt. When the system is not in use, the fabrics are retracted under the standard hood cover to protect from weather elements. When required, linking multiple systems is possible with a channel joining system that ensures a watertight link. The SPLINE VARIANCE system includes an integrated gutter system with internal drainage to carry out water from the rain.

Remote Control

RAL Colour

LED in Frames

Windows in Frames

Screens in Frames

Patio Heater

Rain and Snow Sensor

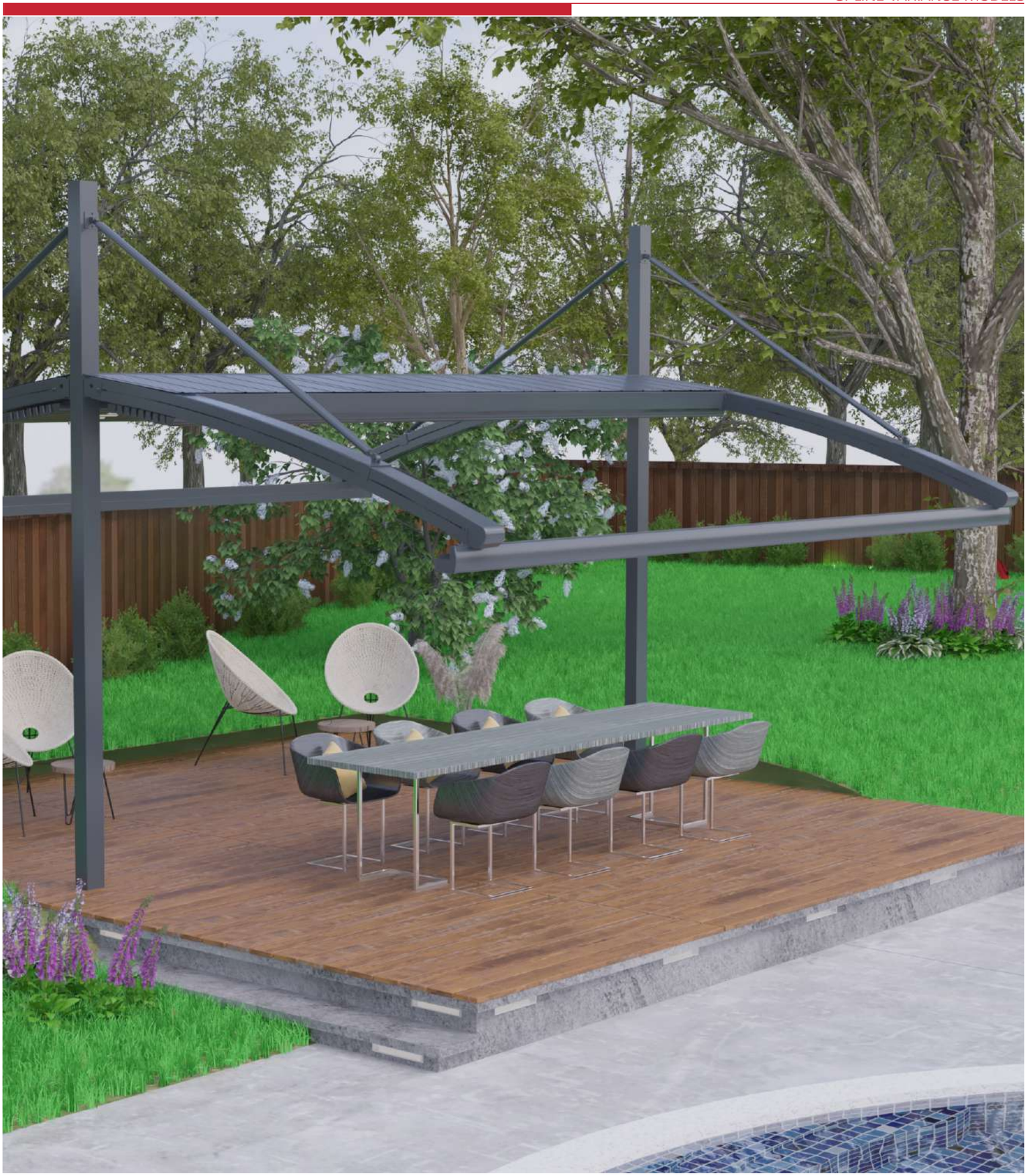

www.weavecraft.net

The SPLINE VARIANCE Curved Rafter Profiles have been designed with smart side channels that allow an easy installation and side Waterguard Channels. Rafter profiles, including a timing belt of T10/33, are driven by patented six-wheel sliders with easy clip installation for fabric that allows a silent motion when the fabric is retracted. SPLINE VARIANCE rafters are served with two different dimensions:

The SPLINE VARIANCE - 135 Rafter (80x135mm.) allows projections up to 10 m. per unit, and widths are customized according to site requirements up to 13 m. totally offering up to 130 sqm per system.

The SPLINE VARIANCE - 200 Rafter (100x200mm.) allows projections up to 10 m. per unit, and widths are customized according to site requirements up to 13 m. totally offering up to 130 sqm per system.

VAULT MODELS

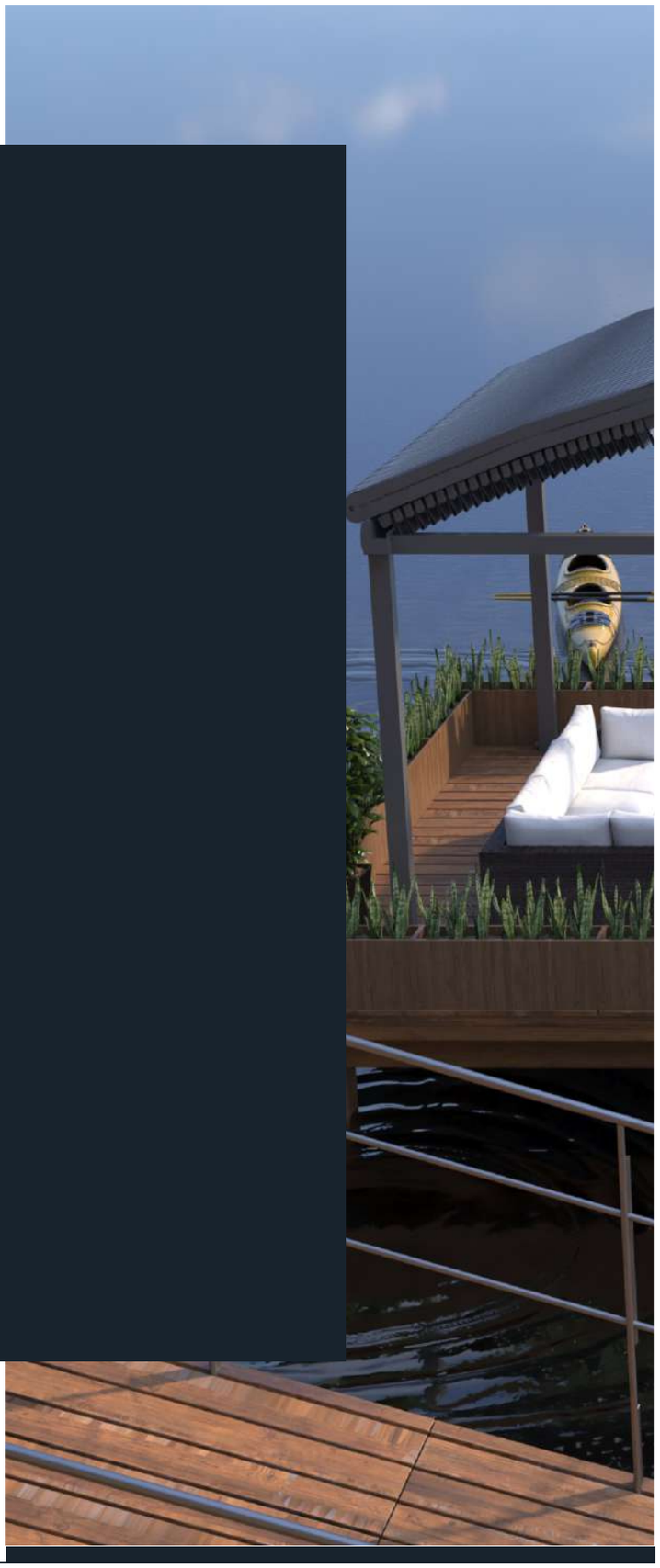

The VAULT retractable pergola systems provide a perfect and functional solution for all weather conditions, for rain, hail, or shine in residential or commercial applications. Unlike regular pergolas, retractable offers you the option to cover or enjoy natural lighting. The systems are served with remote-controlled motorization, ensuring a silent and quick operation while switching between your choices. The optional embedded hi-powered LED lighting system with optional remote-controlled dimming allows the user to change the lighting level as needed.

The cover is a German-made fire-rated and waterproof PVC-blackout fabric available in a number of colors and provides maximum durability and resistance to temperature, moisture, and dirt. When the system is not in use, the fabrics are retracted under the standard hood cover to protect from weather elements. When required, linking multiple systems is possible with a channel joining system that ensures a watertight link. The VAULT system includes an integrated gutter system with internal drainage to carry out water from the rain.

Remote Control

RAL Colour

LED in Frames

Windows in Frames

Screens in Frames

Patio Heater

Rain and Snow Sensor

The VAULT Curved Rafter Profiles have been designed with smart side channels that allow an easy installation and side Waterguard Channels. Rafter profiles, including a timing belt of T10/33, are driven by patented six-wheel sliders with easy clip installation for fabric that allows a silent motion when the fabric is retracted. VAULT rafters are served with two different dimensions to provide a maximum range for extension values:

The VAULT- 135 Rafter (80x135 mm.) allows projections up to 7 m. per unit, and widths are customized according to site requirements up to 13 m. totally offering up to 91 sqm per system.

The VAULT- 200 Rafter (100x200 mm.) allows projections up to 11 m. per unit, and widths are customized according to site requirements up to 13 m. totally offering up to 143 sqm per system.

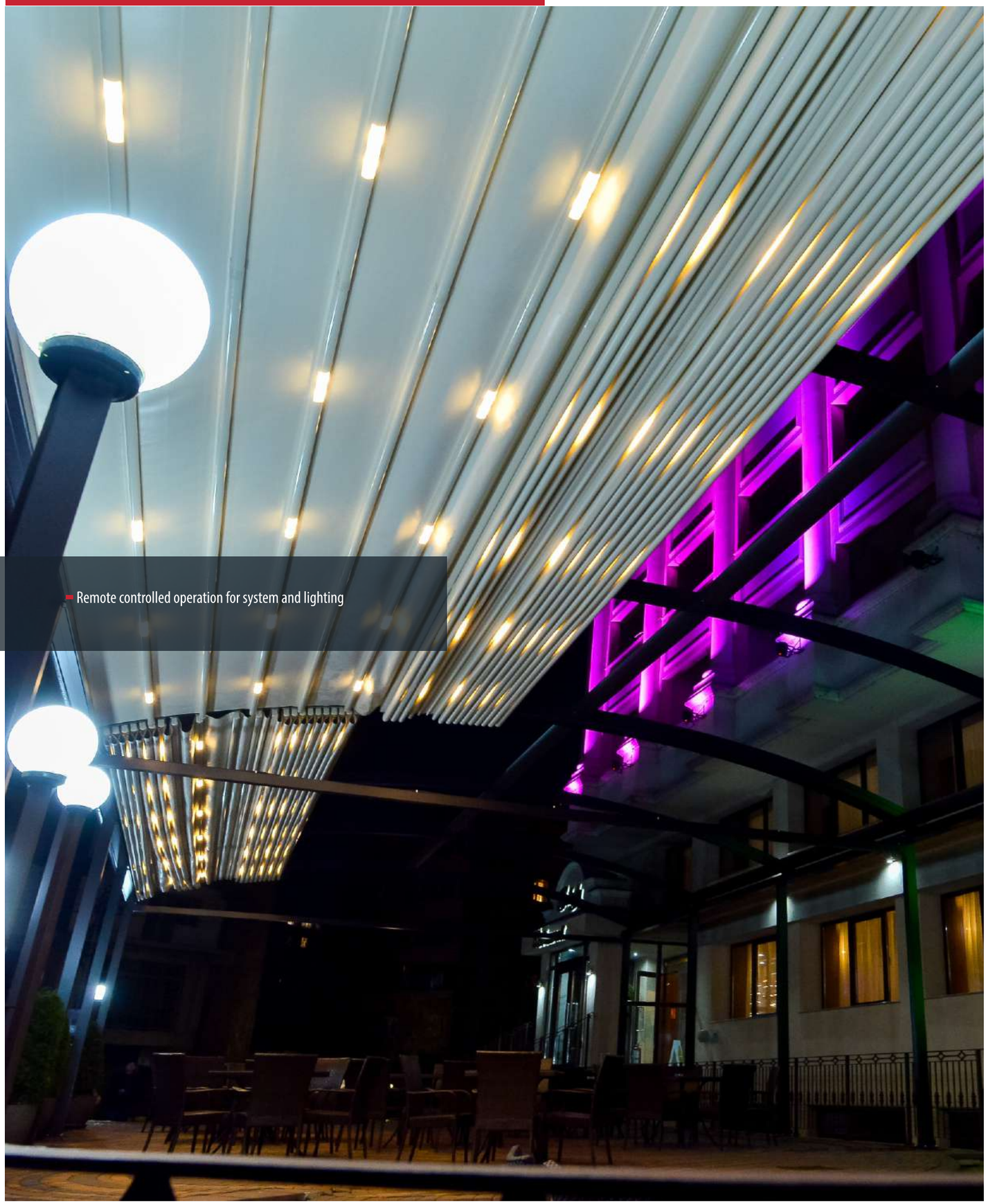

- Remote controlled operation for system and lighting

VAULT VARIANCE MODELS

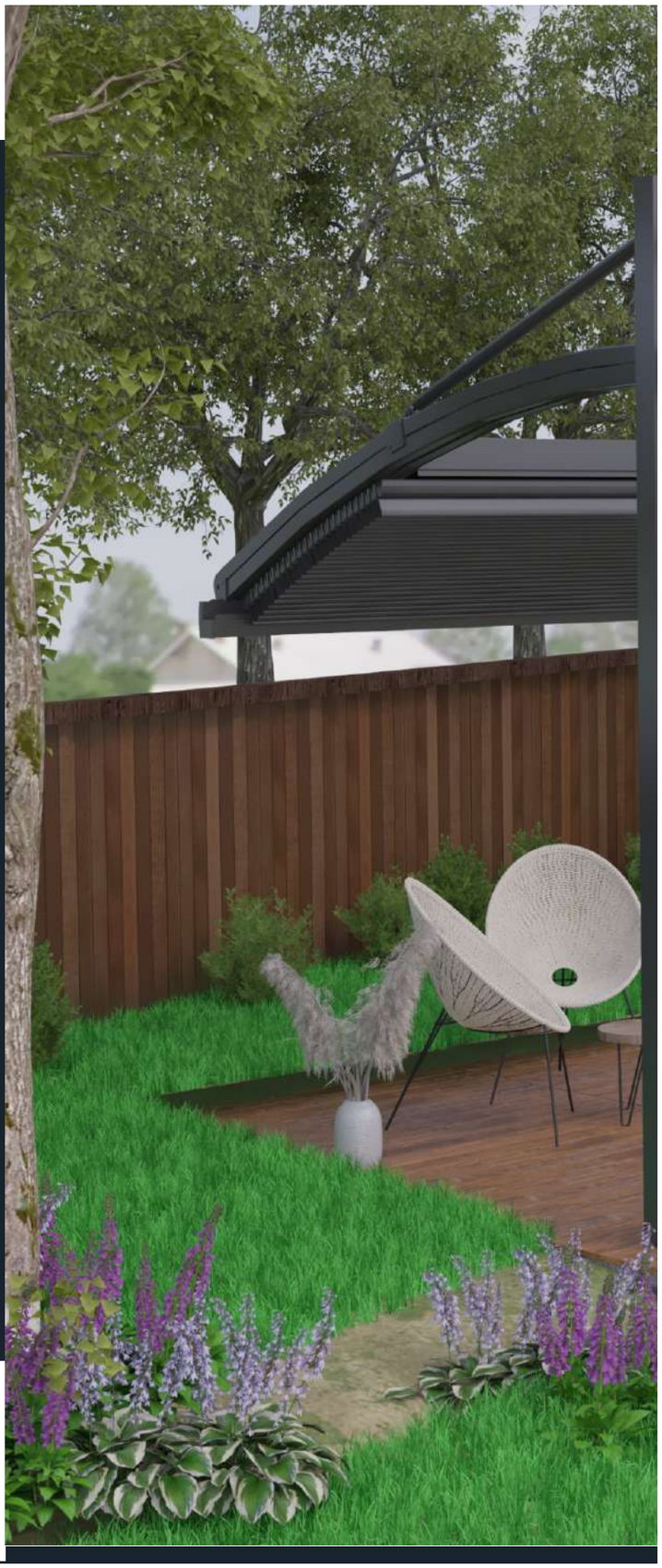

The VAULT VARIANCE retractable pergola systems provide a perfect and functional solution for all weather conditions, rain, hail, or shine in residential or commercial applications. Unlike regular pergolas, retractable offers you the option to cover or enjoy natural lighting. The systems are served with remote-controlled motorization, ensuring a silent and quick operation while switching between your choices. The optional embedded hi-powered LED lighting system with optional remote-controlled dimming allows the user to change the lighting level as needed.

The cover is a German-made fire-rated and waterproof PVC-blackout fabric available in a number of colors and provides maximum durability and resistance to temperature, moisture, and dirt. When the system is not in use, the fabrics are retracted under the standard hood cover to protect from weather elements. When required, linking multiple systems is possible with a channel joining system that ensures a watertight link. The VAULT VARIANCE system includes an integrated gutter system with internal drainage to carry out water from the rain.

Remote Control

RAL Colour

LED in Frames

Windows in Frames

Screens in Frames

Patio Heater

Rain and Snow Sensor

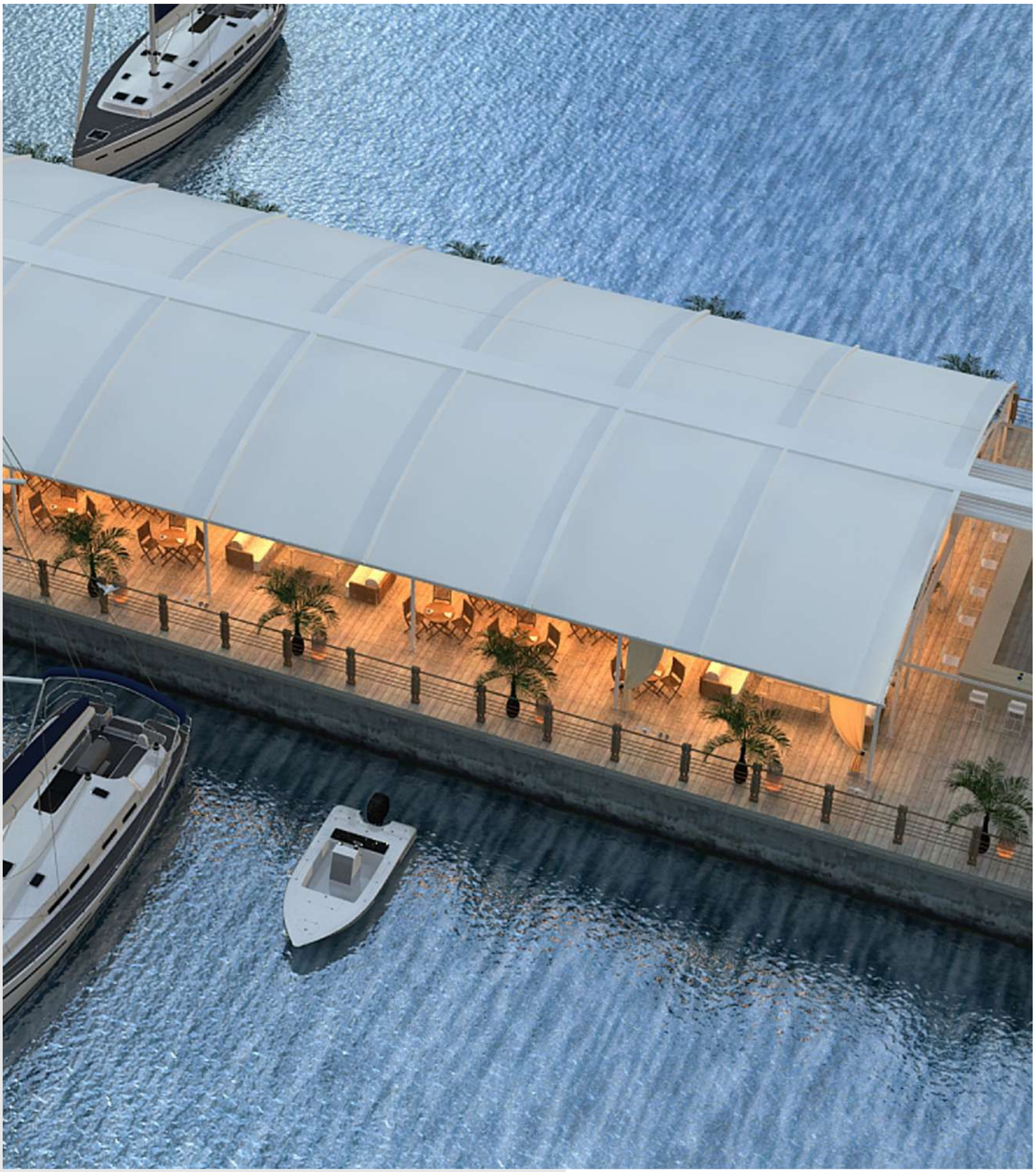

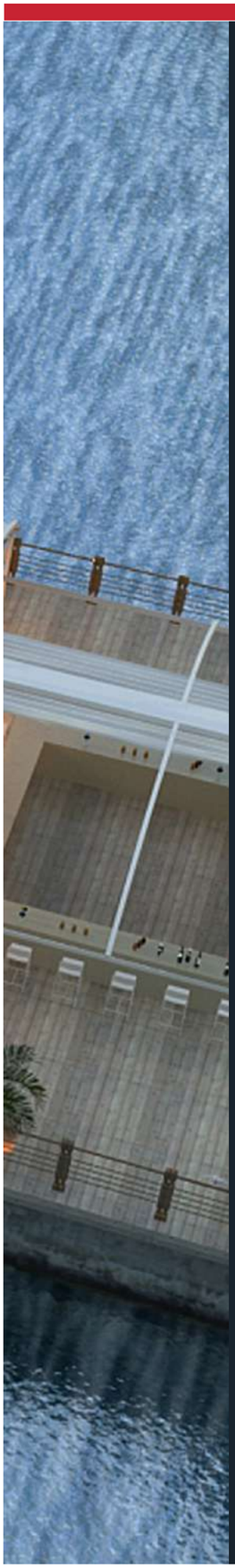

The VAULT VARIANCE Curved Rafter Profiles have been designed with smart side channels that allow an easy installation and side Waterguard Channels. Rafter profiles, including a timing belt of T10/33, are driven by patented six-wheel sliders with easy clip installation for fabric that allows a silent motion when the fabric is retracted. VAULT VARIANCE rafters are served with two different dimensions to provide a maximum range for extension values:

The VAULT- 135 Rafter (80x135 mm.) allows projections up to 7 m. per unit, and widths are customized according to site requirements up to 9 m. totally offering up to 63 sqm per system.

The VAULT- 200 Rafter (100x200 mm.) allows projections up to 8 m. per unit, and widths are customized according to site requirements up to 9 m. totally offering up to 72 sqm per system.

FLAT

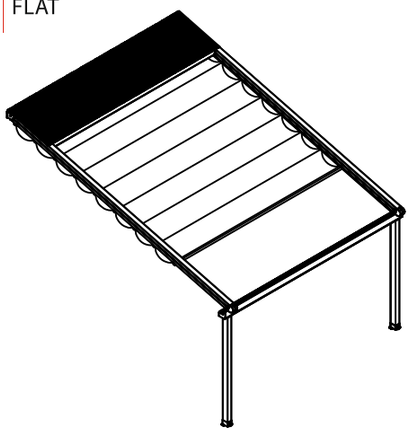

SPLINE

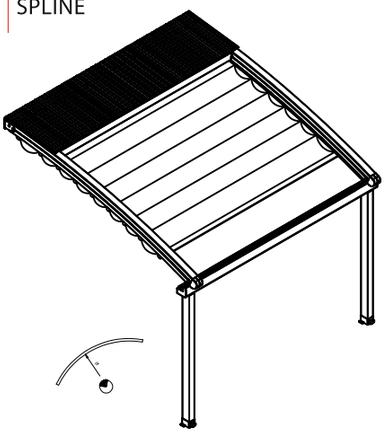

VAULT

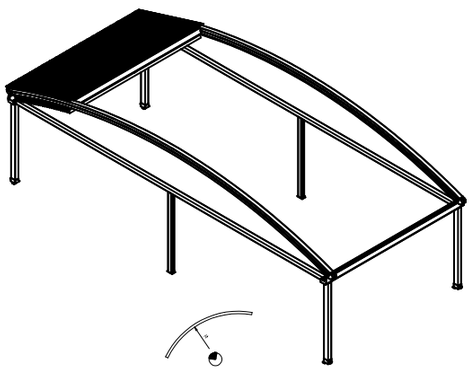

FLAT HARMONY

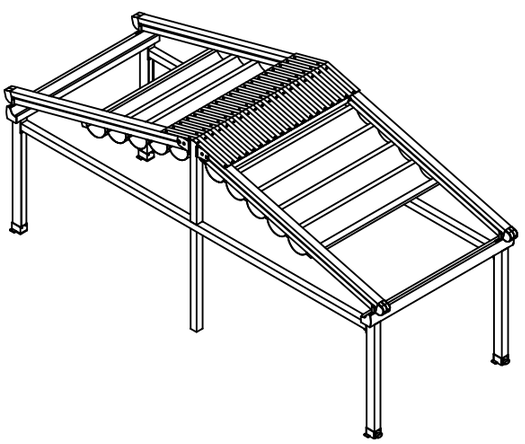

SPLINE HARMONY

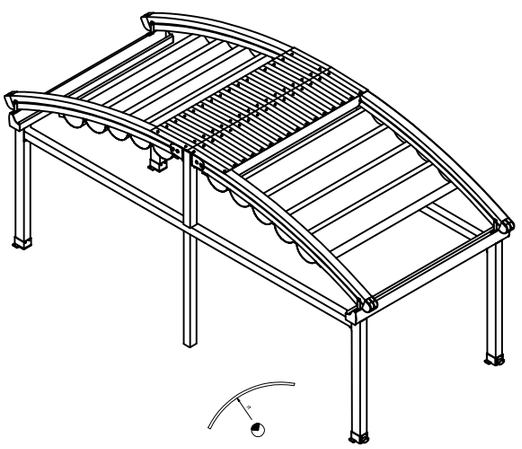

FLAT CITY

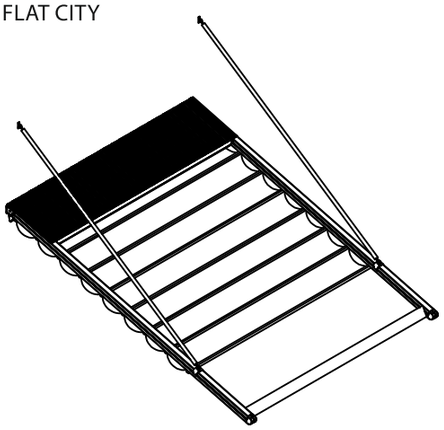

SPLINE CITY

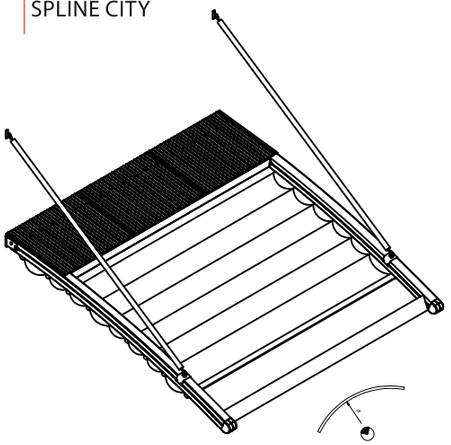

FLAT VARIANCE

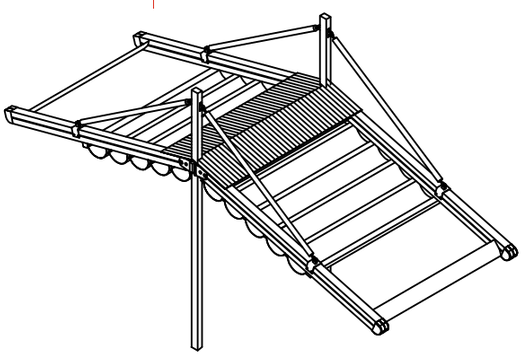

SPLINE VARIANCE

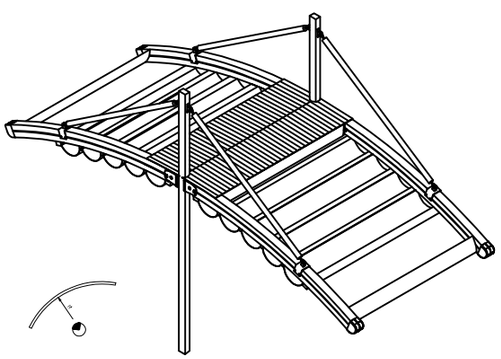

VAULT VARIANCE

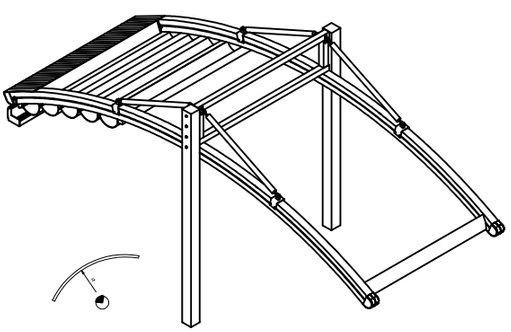

WEAVE Craft
live life outdoors

new era for outdoor living

www.weavecraft.net

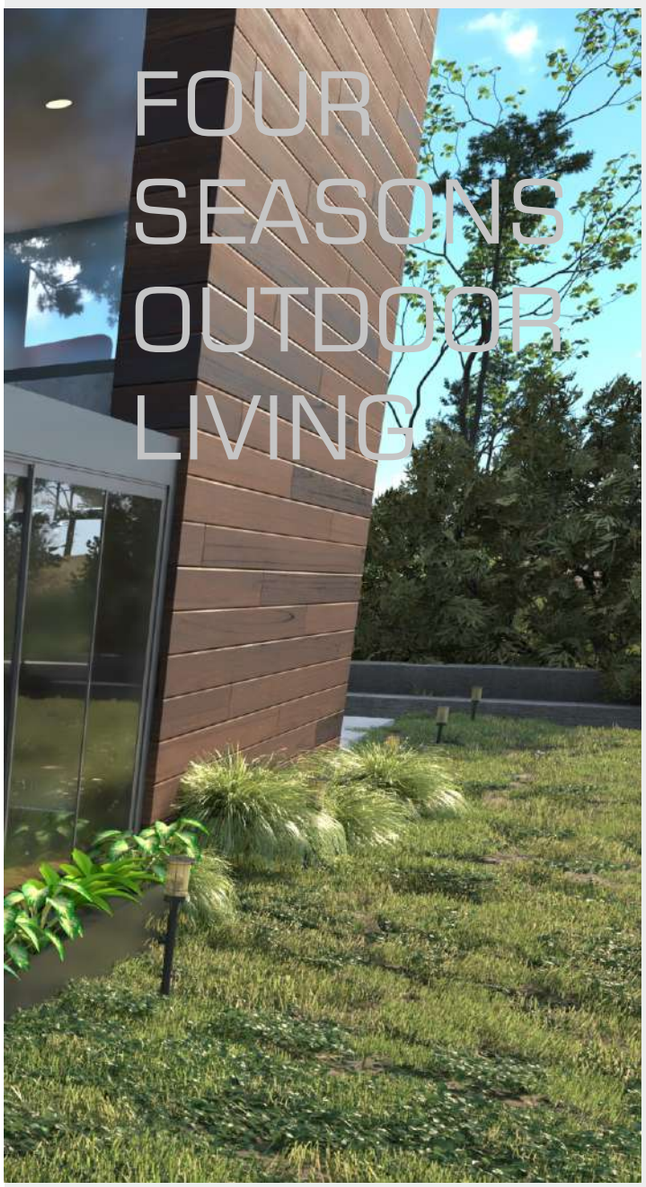
FOUR
SEASONS
OUTDOOR
LIVING

Pergostyle's New Era of Outdoor Living Solutions provides modern, stylish, and functional products that can be configured to meet your various needs. The product group presents architectural concepts for perfect combinations of roof systems and side closures for creating four seasons outdoor living areas. The solutions are functionally adapted such that they fit both existing buildings and the creation of new seperate areas with modern cubic lines.

PRADO MODELS

The PRADO Bioclimatic Tilting Aluminium Louvre system features louvers 18 cm. wide with strong-build rafters of 18x24 cm. in dimension. The package also offers coverage of up to 36 m^2 with dimensions up to 450 cm. in width and 800 cm. in projection. All of these come with the installation of a single frame. The louvers are invisible even at a maximum angle with the standard cover profile. By rotating the louvers (0°-90°) with a remote control or your smartphone to the desired angle, you can choose how much sun or shade you need. When closed, the blades form a real waterproof and airproof roof in normal showers. The blades come functional in draining the water to the side gutter system and evacuating the poles' rainwater. Due to its design, which offers a link between each blade, also between the blades and side gutters, the roof becomes air and waterproof. The optional isolation foam applied inside the louvers increases provides thermal comfort. The PRADO can be mounted directly to the house or integrated into an existing structure, or placed in the garden as a stand-alone construction. If you want to cover large spaces, it is also possible to link the PRADO by several modules.

Remote Control

Mobile Application

RAL Colour

LED in Frames

Windows in Frames

Screens in Frames

Patio Heater

Rain and Snow Sensor

The LED lighting is completely integrated with the PRADO structure that offers cold (5100 K) or warm white (2800 K) options for direct lighting with standard dimming to adapt the intensity of lighting for the desired level. A second ambiance lighting is offered with an RGB option under the roof area, allowing users to select from a wide range of colors. And all of these are operated with a remote control or smartphone application.

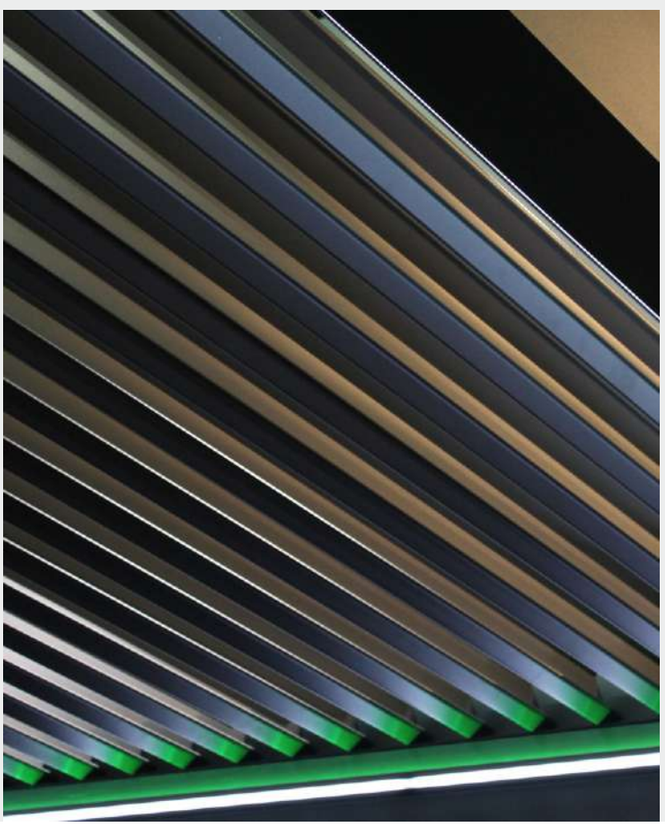

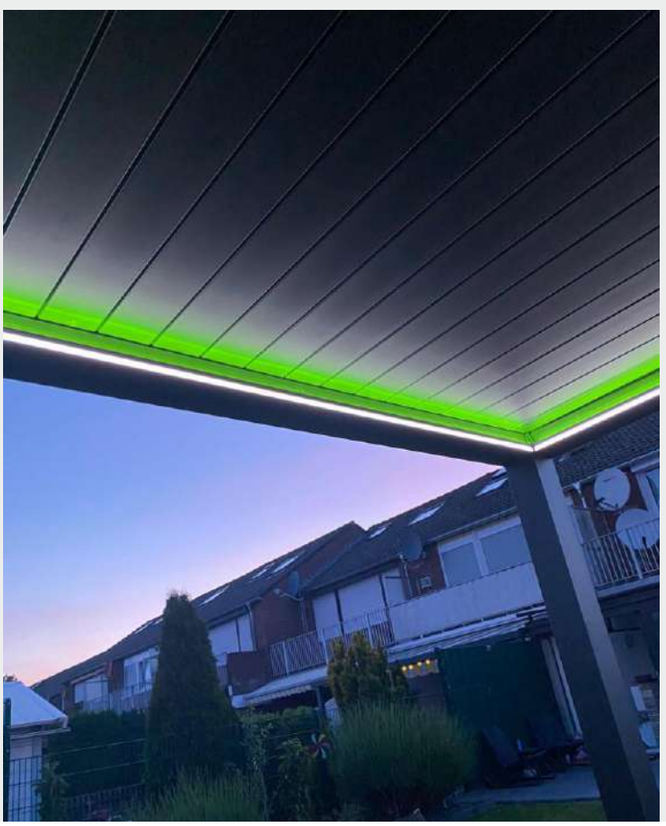

- Projections up to 8 mt

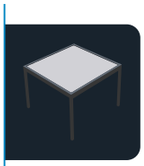

EVO MODELS

The EVO retractable roof system offers up to 44 m^2 with maximum dimensions of 550 cm. in width and 800 cm. in projection, with a single frame's installation. The fabric can be partially or wholly opened. You can choose how much sun or shade you need. When extended fully, it offers perfect sun-shading or protection against rain. The fabric drains the water to the side gutter system and evacuates the poles' rainwater. The EVO can be mounted directly into the house or integrated into an existing structure, or placed in the garden as a stand-alone construction. If you want to cover large spaces, it is also possible to link several modules.

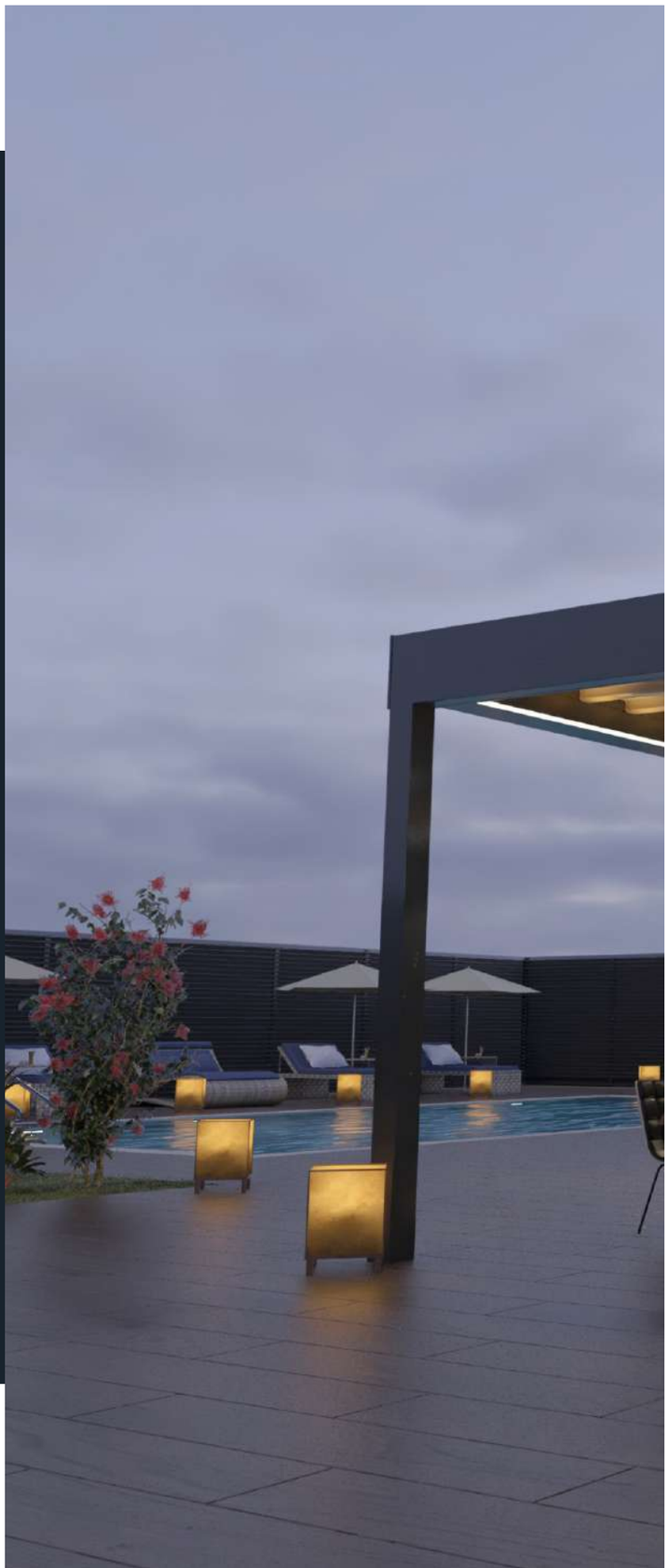

Remote Control

Mobile Application

RAL Colour

LED in Frames

Windows in Frames

Screens in Frames

Patio Heater

Rain and Snow Sensor

The LED lighting is completely integrated with the EVO structure that offers cold (5100K) or warm white (2800K) options for direct lighting with standard dimming to adapt the intensity of lighting for the desired level. A second ambiance lighting is offered with an RGB option under the roof area, allowing users to select from a wide range of colors. And all of these are operated with a remote control or smartphone application.

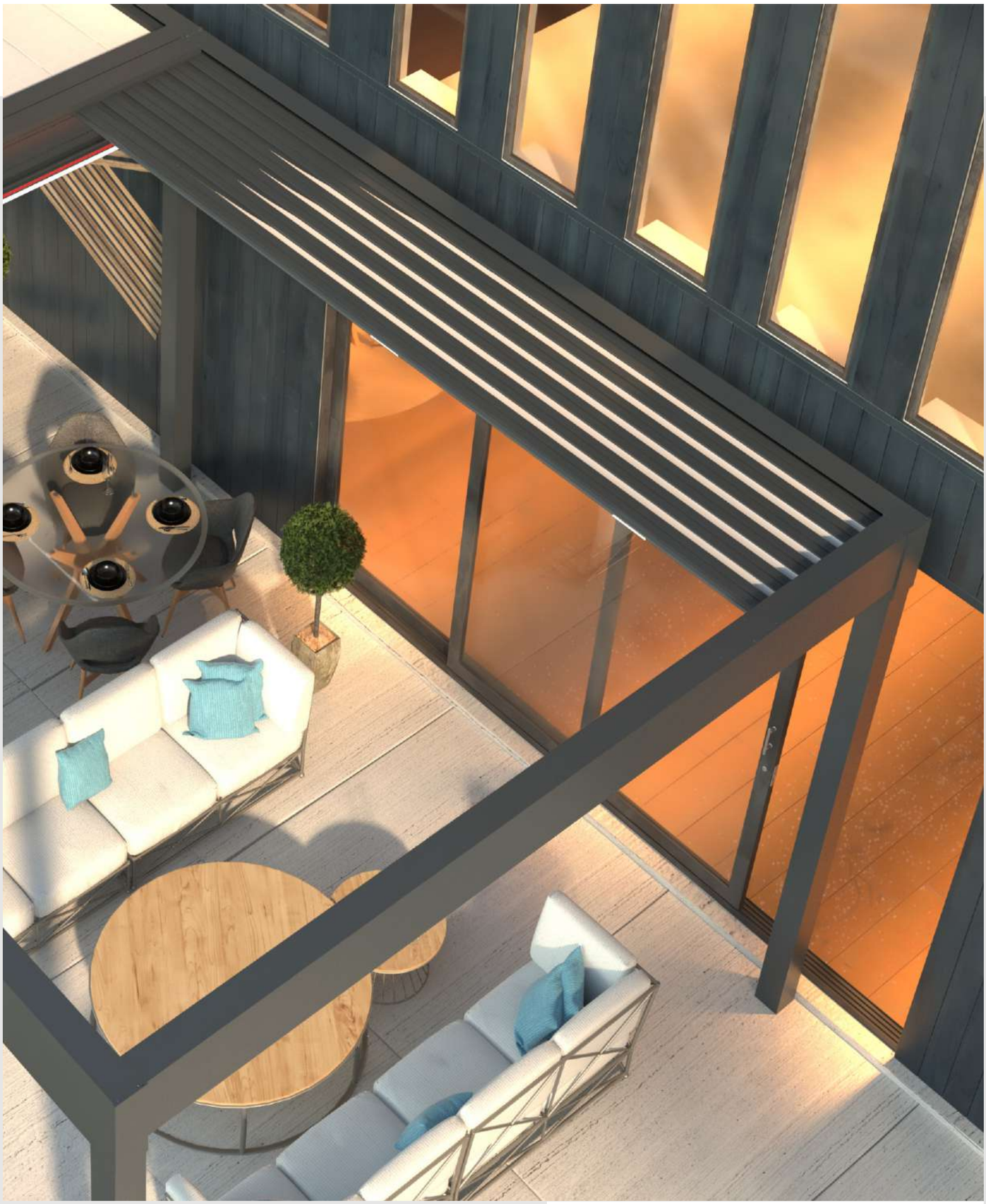

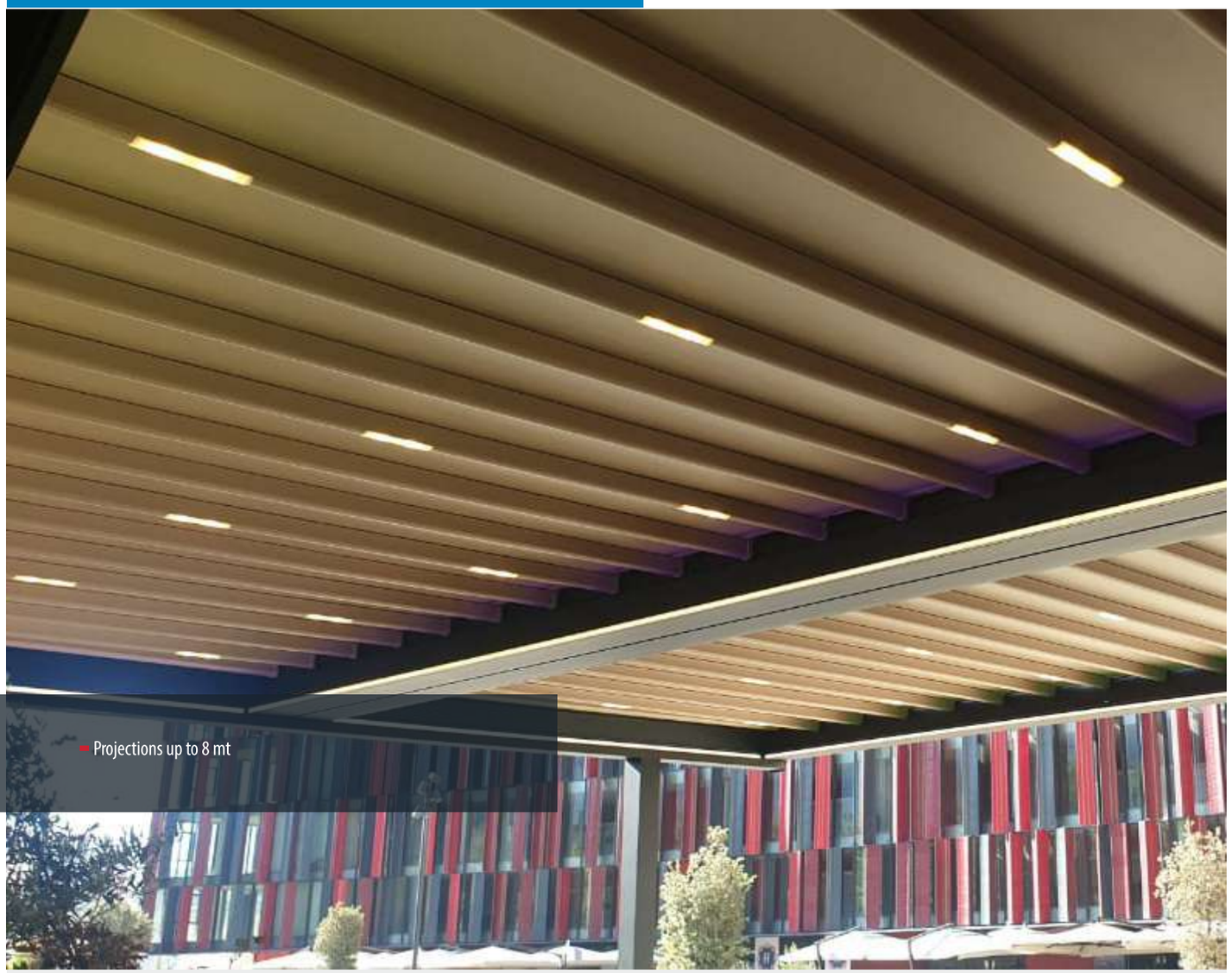

- Projections up to 8 mt

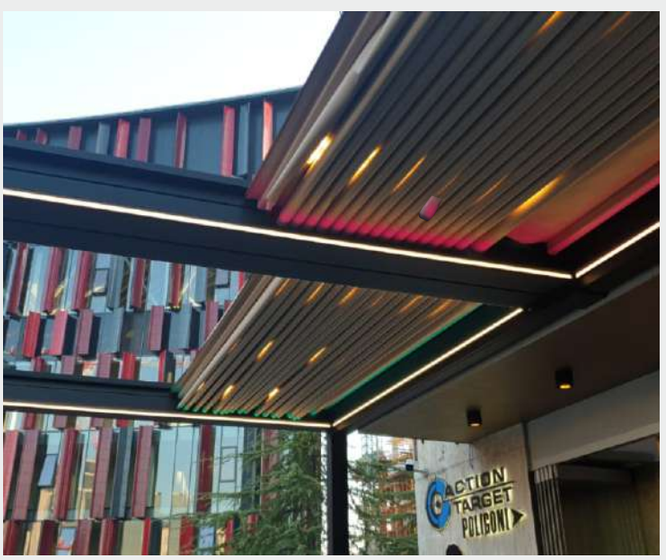

PROSCREEN MODELS

The PROSCREEN-ZIP series provides an elegant square design for indoor or outdoor applications. Proscreen-Zip115V can be installed in vertical, offering you coverage of up to 16 sqm coupled with a smooth and silent operation system. The intelligent wind-tight guiding system is equipped with a durable top layer, ensuring that the fabric has no folds or wrinkles and is windtight in any position. Proscreen-Zip115V offers an outdoor space with protection against the sun, wind, rain, and insects.

Proscreen-Zip150V can be installed in vertical, provides coverage of up to 22 sqm coupled with a smooth and silent operation system. The intelligent wind-tight guiding system is equipped with a durable top layer, ensuring that the fabric has no folds or wrinkles and is windtight in any position. Proscreen-Zip150V offers an outdoor space with protection against the sun, wind, rain, and insects. Bottom bar can be removed, depending on the finished height, partially or entirely in the box.

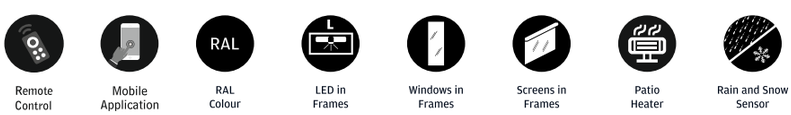

Remote Control | Mobile Application | RAL Colour | LED in Frames | Windows in Frames | Screens in Frames | Patio Heater | Rain and Snow Sensor

- Proscreen-Zip150H can be installed on inclined or horizontal glazings, offers coverage of up to 15 sqm coupled with a smooth and silent operation system. The intelligent wind-tight guiding system is equipped with a durable top layer, ensuring that the fabric has no folds or wrinkles and is windtight in any position. Proscreen-Zip150H offers protection against the sun, provides optimum temperature control, even if you are at home or not.

- Proscreen -Zip150H kann auf geneigten oder horizontalen Verglasungen installiert werden, bietet eine Abdeckung von bis zu 15 qm, mit seinem sanften und leisen Betrieb in Bewegung. Durch das Spannsystem entstehen keine Falten oder Knicke auf dem Tuch und das Tuch ist in jeder Position winddicht. Proscreen -Zip150-H bietet Schutz vor der Sonne, gewährleistet eine optimale Temperaturkontrolle, auch wenn Sie zu Hause sind oder nicht.

- Proscreen-Zip150H peut être installé sur des vitrages inclinés ou horizontaux, offre une couverture allant jusqu'à 15 m^2, avec son fonctionnement fluide et silencieux en mouvement. Le système de tension ne produit ni plis ni plis sur le tissu et le tissu est étanche au vent dans toutes les positions. Proscreen –Zip150-H, offre une protection contre le soleil, assure un contrôle optimal de la température, que vous soyez à la maison ou non.

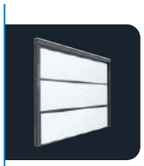

PERGOWIN MODELS

The Pergowin Glass series is designed to produce suitable architectural solutions, meeting different outdoor applications' needs.

The Pergowin Guillotine Glass system is an innovative, functional vertical motorized glass system. The system offers up to 12 sqm coverage, available with 8, 10 mm. tempered, tempered laminated, 5+9+5 tempered double glazing, glass combinations, with its smooth and silent operation in motion. As the system motion is on a vertical axis with one fixed one movable or one fixed two movable sections, the design allows the system to become a balustrade when retracted without losing any space inside. When extended, the view is void of vertical profiles, which allows a clear view in a horizontal plane.

Remote Control

RAL Colour

Rain Sensor

- A glass facade system with automatic control.

PERGOWIN SLIDING FRAME MODELS

The Pergowin Sliding Frame Glass system is a sliding system designed with threshold. It offers up to 16,8 sqm coverage and is available with 5+11+5 mm. tempered double glazing with the required number of sections up to 5,6 meters in width in one side operation and will be doubled with two sides operation option . Thanks to its clever extra light roller system and silent locking system, users can enjoy smooth manual operation between each section while the system is extended or retracted.

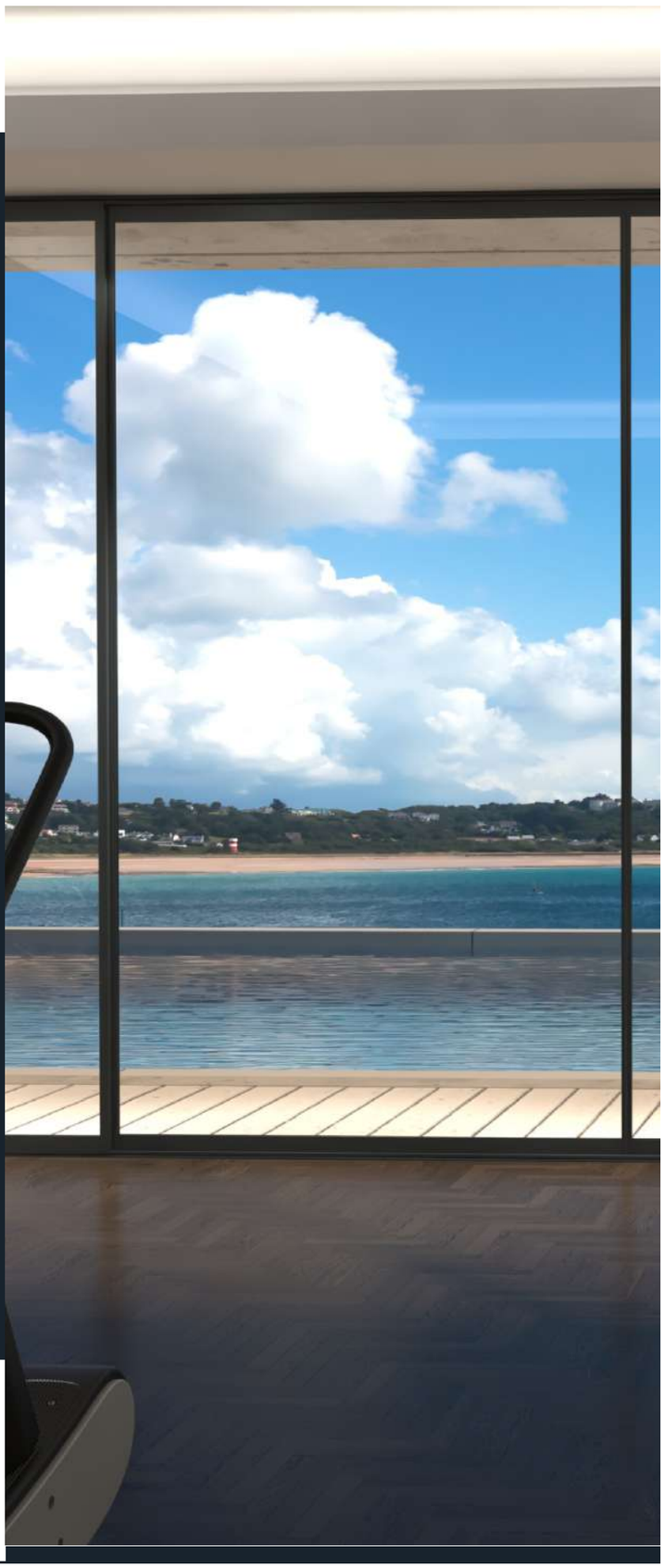

Remote Control

RAL Colour

Rain Sensor

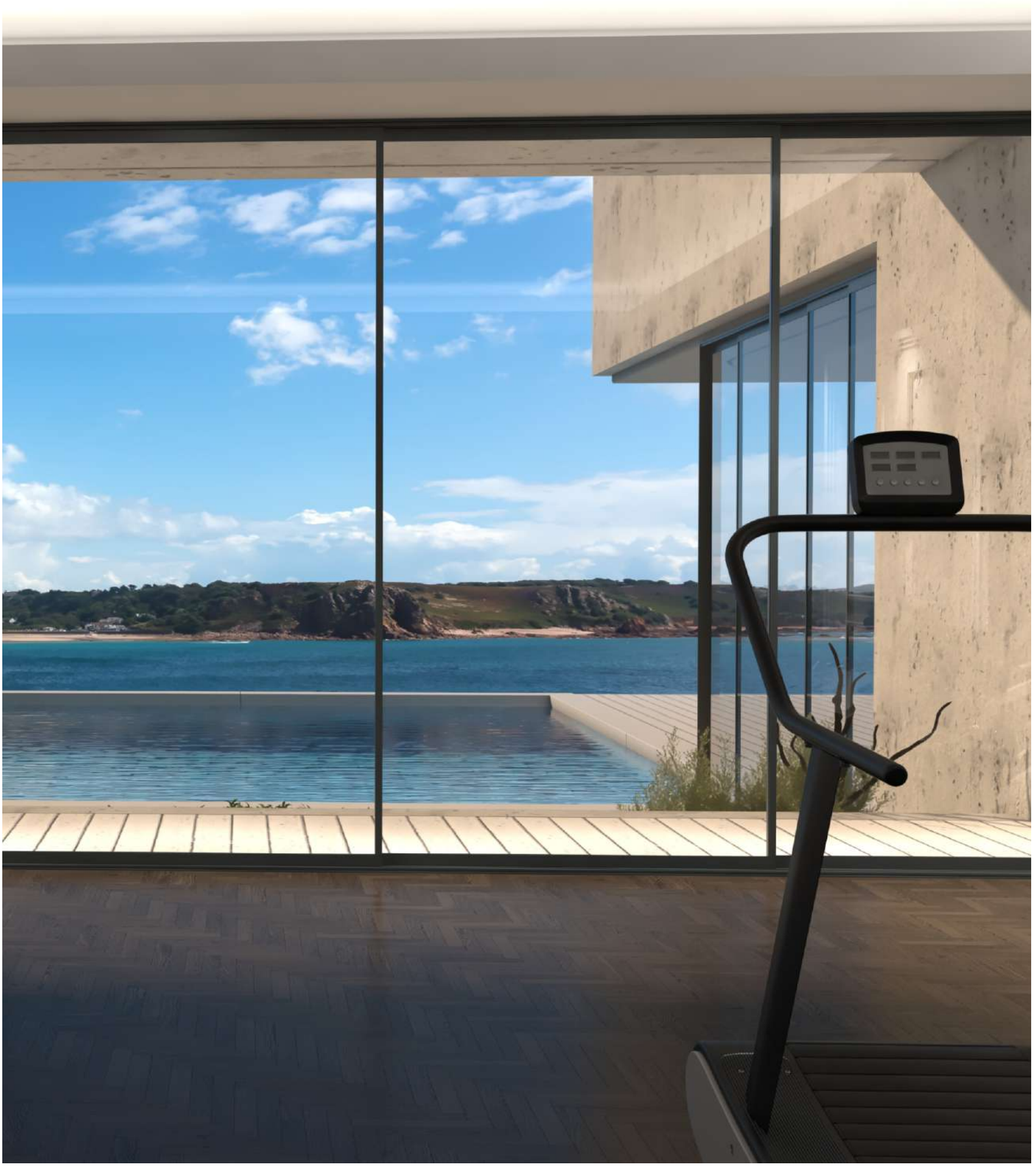

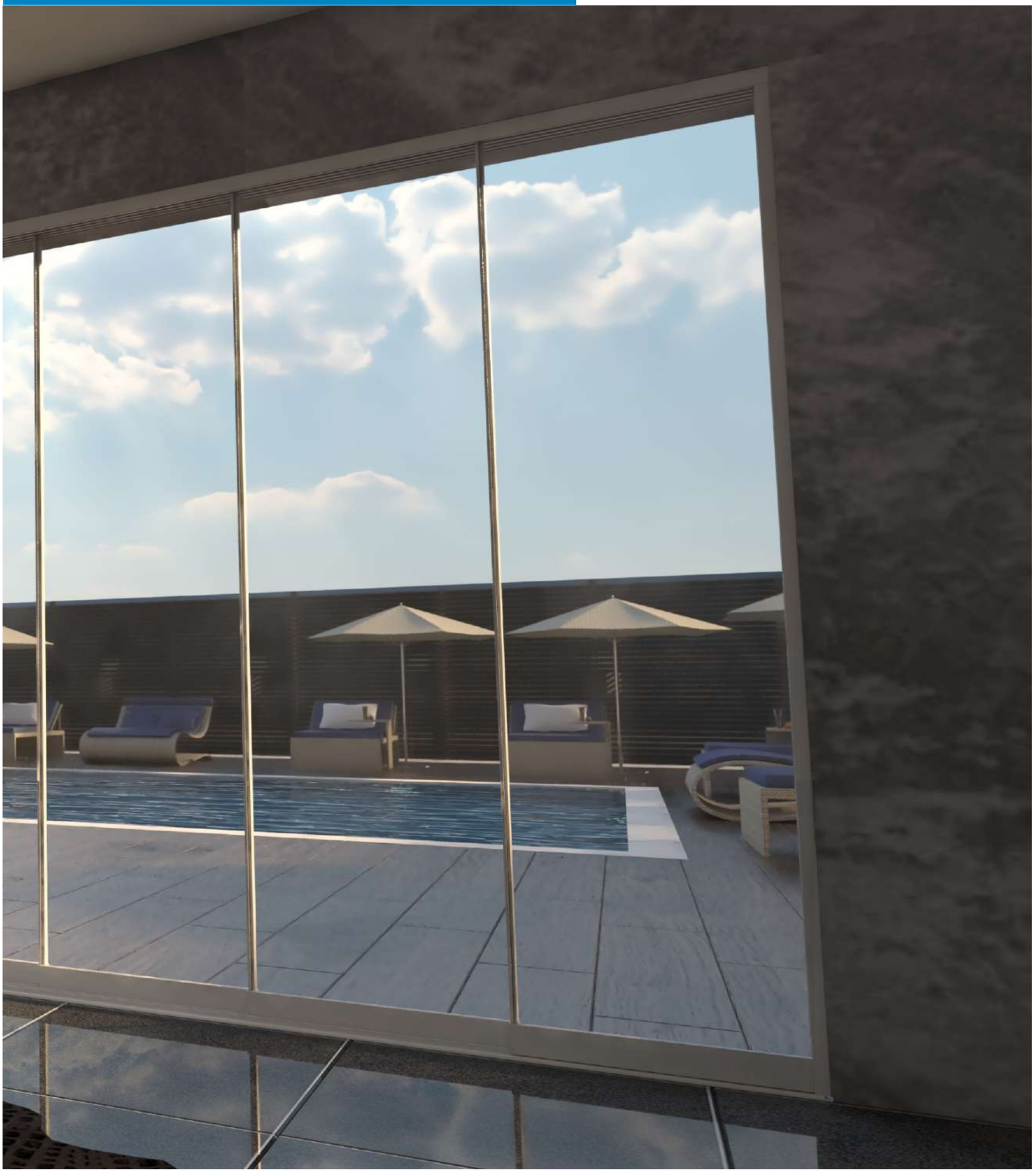

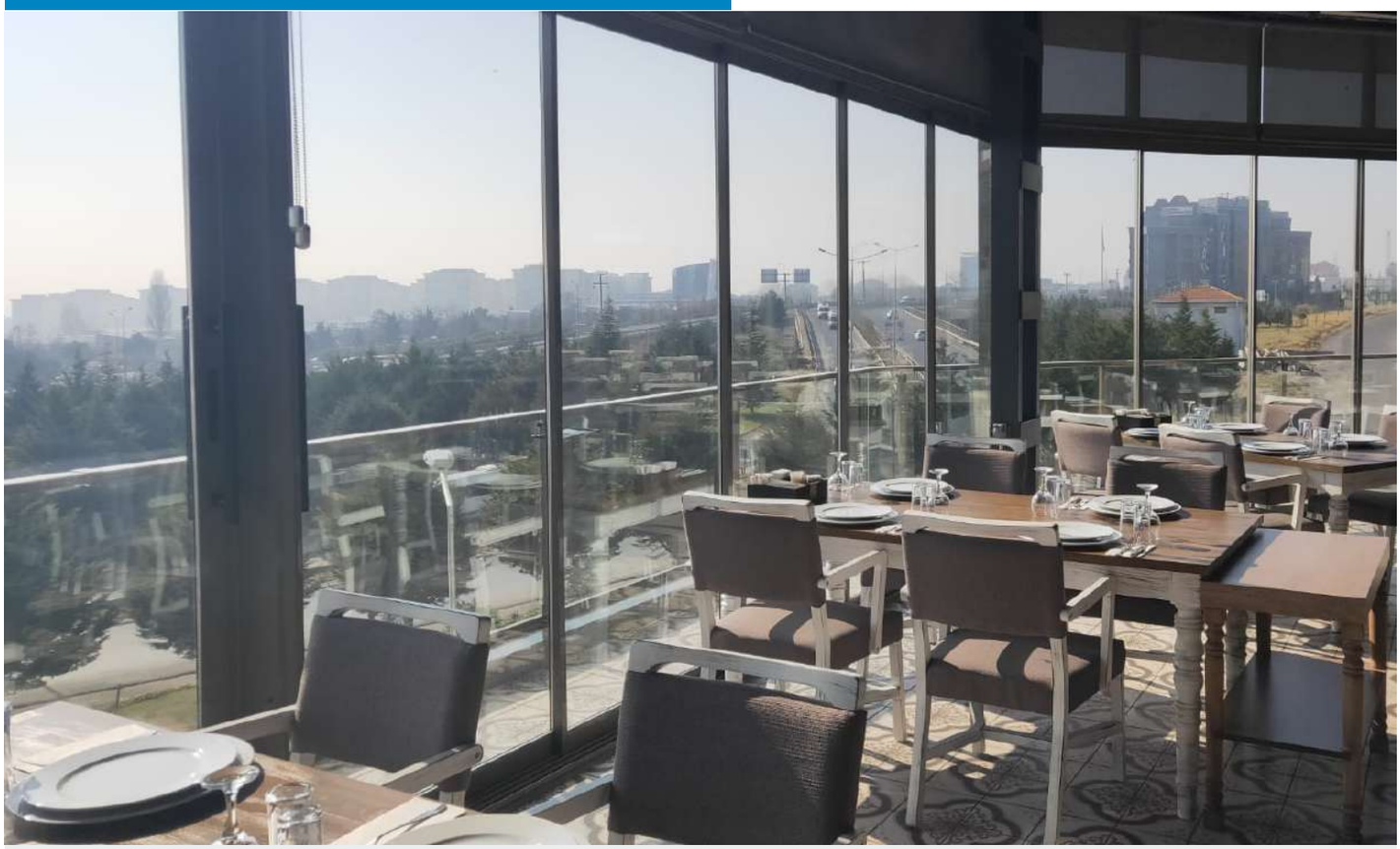

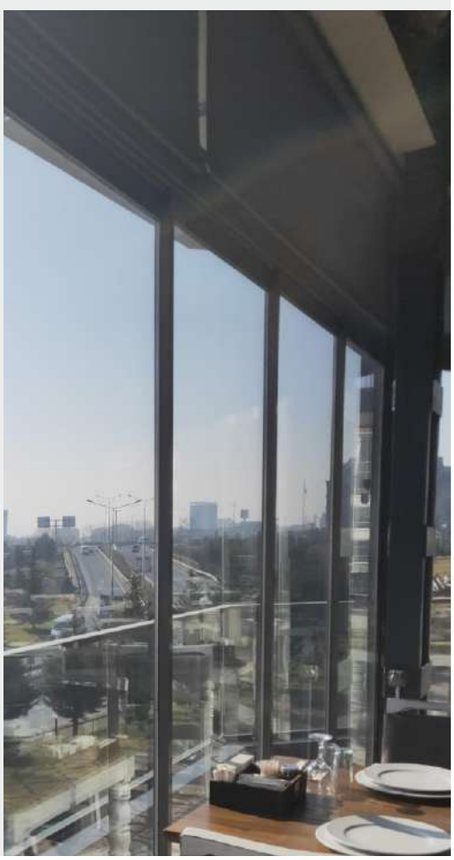

PRADO

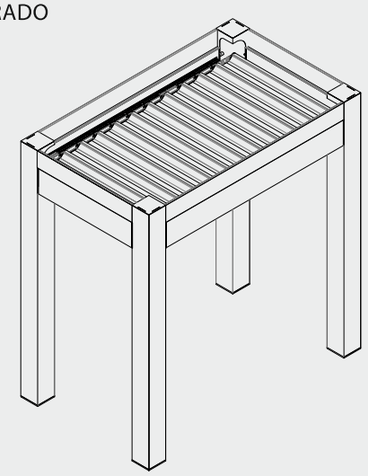

EVO

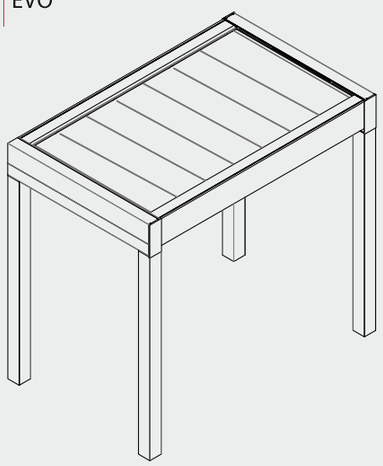

PROSCREEN

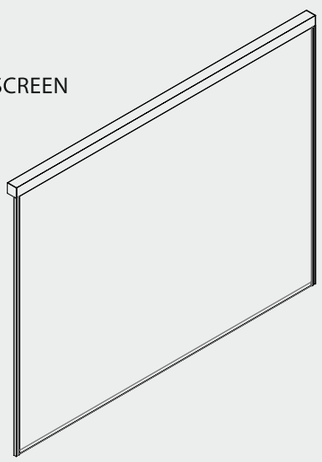

PERGOWIN GUILLOTINE

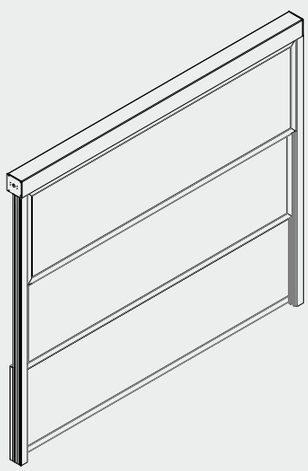

PERGOWIN SLIDING FRAME

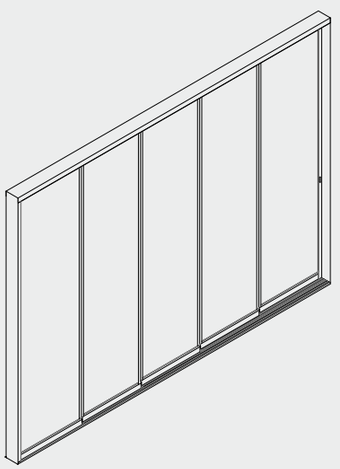

WEAVE Craft
live life outdoors

FOUR SEASONS OUTDOOR LIVING